R-1683 IMAGE MEDIA 21-32-01 300 6-81 74567

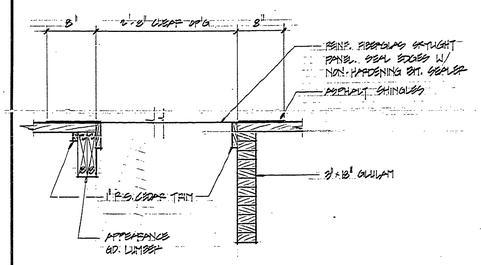

SECTION 1 / 3 3 — 1½": ONE FOOT

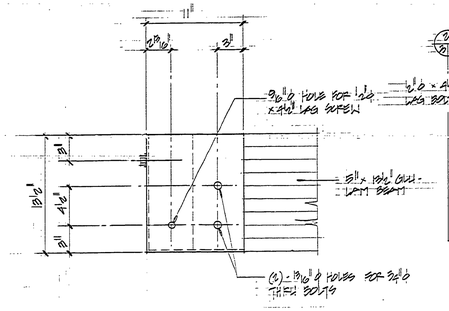

SECTION 2 / 3 3 — 1½": ONE FOOT

NOTE:
ALL PLATES TO BE WELDED TOGETHER IN A SECURE MANNER.

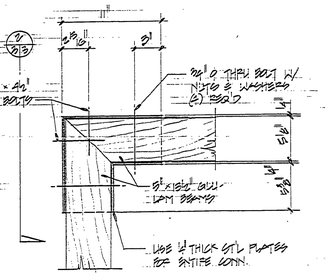

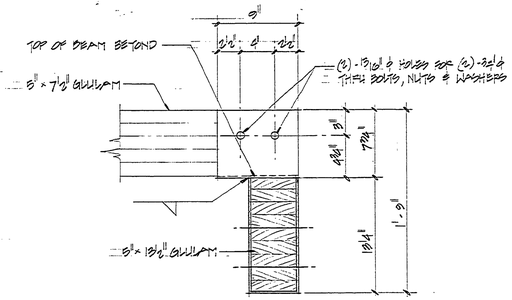

SECTION 3 / 3 3 — 1½": ONE FOOT

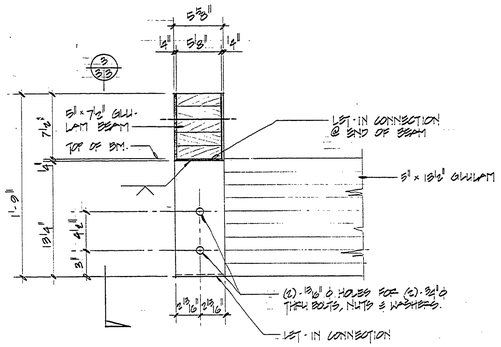

SECTION 4 / 3 3 — 1½": ONE FOOT

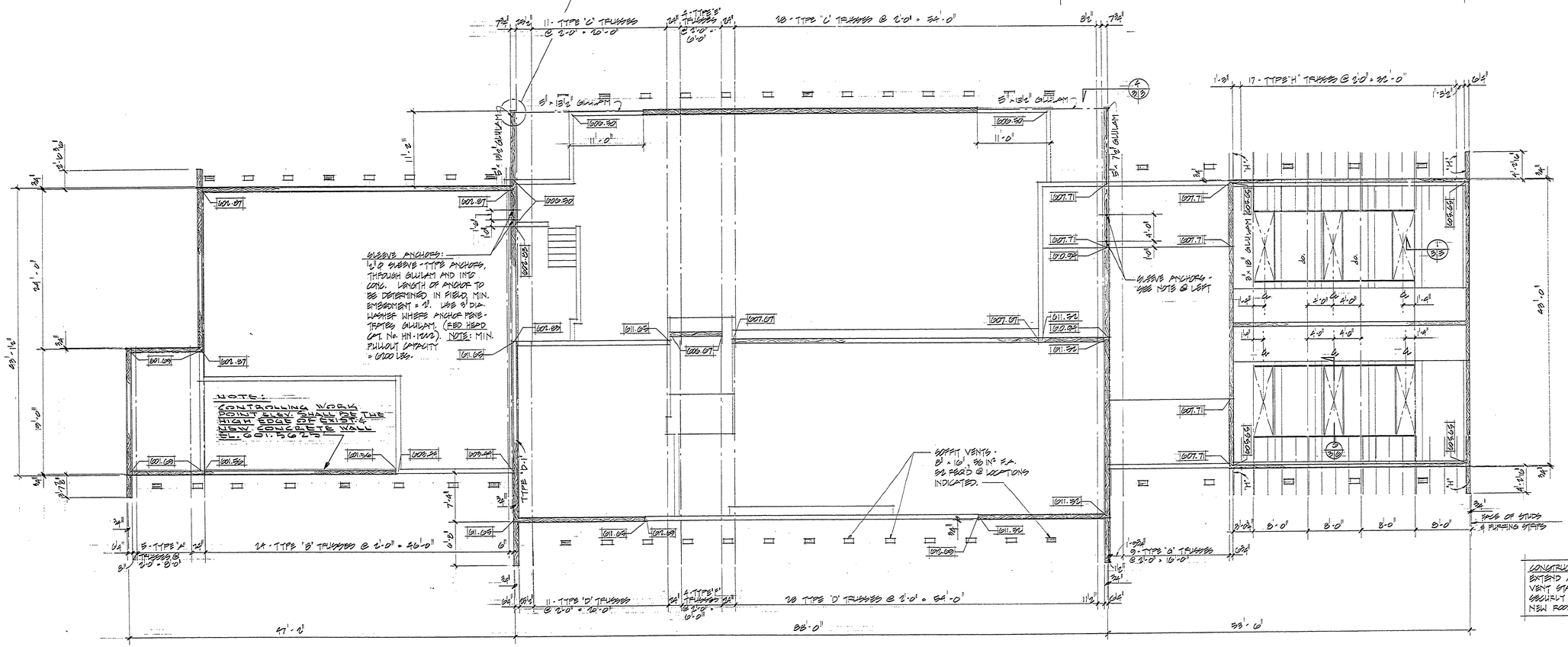

CONSTRUCTION NOTE: EXIST'G EXTEND AND/OR REVOLVE SANITARY VENT STACKS. FLASH & WEATHER-SEAL CAREFULLY WHERE PENETRATING NEW ROOF.

ROOF FRAMING PLAN

1/8" = ONE FOOT

|1011.32| = ELEVATIONS @ EXIST'G CONC. PARAPETS

SURVEYED BY		DRAWN BY		NO.	DATE	BY	REVISIONS	NO.	DATE	BY	REVISIONS	MICHIGAN DEPARTMENT OF NATURAL RESOURCES	ROOF FRAMING PLAN
DESIGNED BY		CHECKED BY		1.				3.					SHEET TITLE
	DATE		DATE	2.				4.					

AREA OR PARK: MUSKEGON STATE PARK
PROJECT: BATCHHOUSE RE-ROOFING
PROJECT NO. 24-2372
SHEET 3 OF 7
PLAN NO. A-116