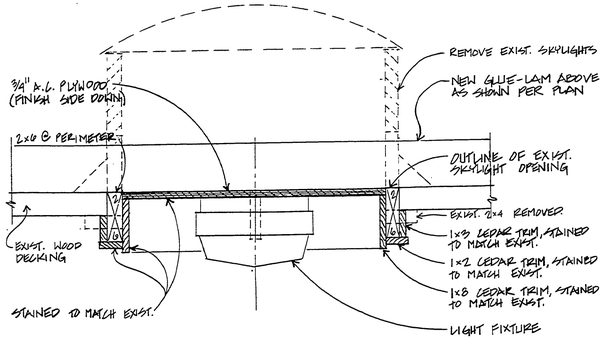


1 / A-2 SKYLIGHT DETAIL
(BUILDING 'A') SCALE: 1½"=1'-0"

NOTE: INTERIOR TRIM TO BE S4S

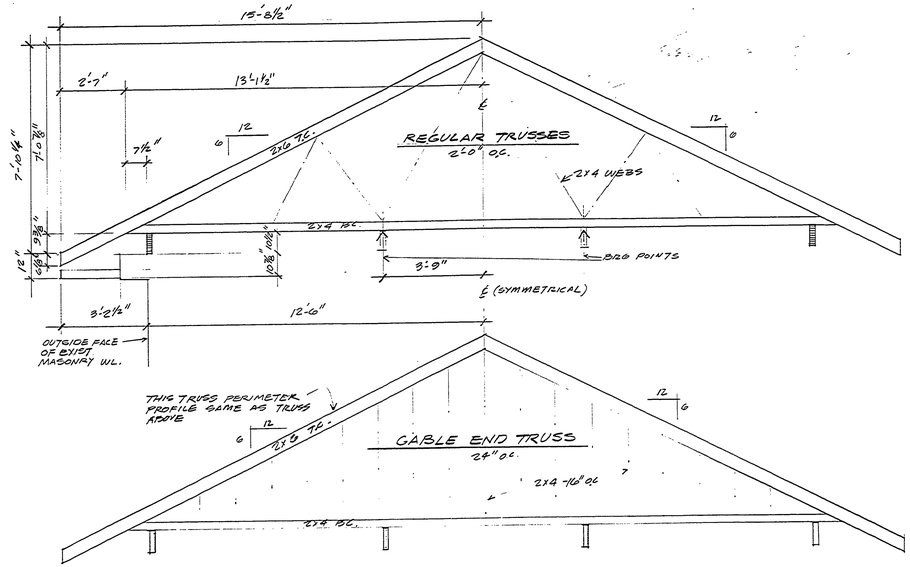


TRUSS PROFILES
3/8"=1'-0"

## ROOF TRUSS DESIGN DATA

Wood Roof Trusses are to be pre-engineered & designed by an Engineer registered in the State of Michigan based on the following design loads. Contractor to submit "Sealed Drawings" marked "Approved by Contractor for Owner's Record." Responsibility for correctness of "Sealed Drawings" is the responsibility of the Contractor. Field verify all dimensions.

| | | | |
|---|---|---|---|
| Top Chord Live Load | = | 35 | PSF |
| Top Chord Dead Load | = | 10 | PSF |
| Bottom Chord Dead Load | = | 10 | PSF |
| Total | = | 55 | PSF |

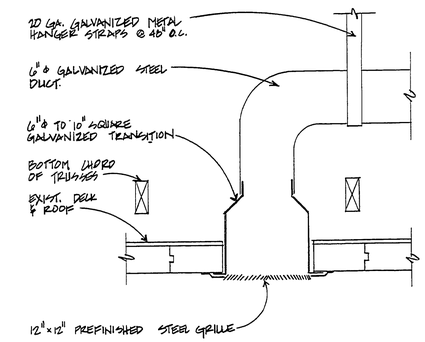


2 / A-2 HVAC GRILLE DETAIL
(BUILDING 'A') SCALE: 1½"=1'-0"

## HVAC Equipment Schedule

| Mark | Description | Manufacturer Name | Manufacturer Catlg.# | Elect. | Gas | CFM | HP | BTU Htg./Clg. | Remarks |
|---|---|---|---|---|---|---|---|---|---|
| EF 1 | DUCT FAN | CHELSEA | SUPER A | 115V 1ϕ | – | 800 CFM @ 1/16 SP. | 1/6 | – | ADJUSTABLE BELT DRIVE DUCT DRIVE CABINET DIMENSIONS TO FIT TRUSS SPACE |

NOTE:
MOUNT TO PROVIDE COMPLETE ACCESS TO FAN CABINET

## LIGHT FIXTURE SCHEDULE

LIGHT FIXTURE "A":

MANUFACTURED BY: MARCO
CAT. NO. LN 708 004

LAMP: 175 W METAL HALIDE
MOUNTING: SURFACE (CEIL)
OPTIONS: "MAX SECURE FEATURE"

PROVIDE 1 EXTRA LAMP & STORE IN PIPE ALLEY

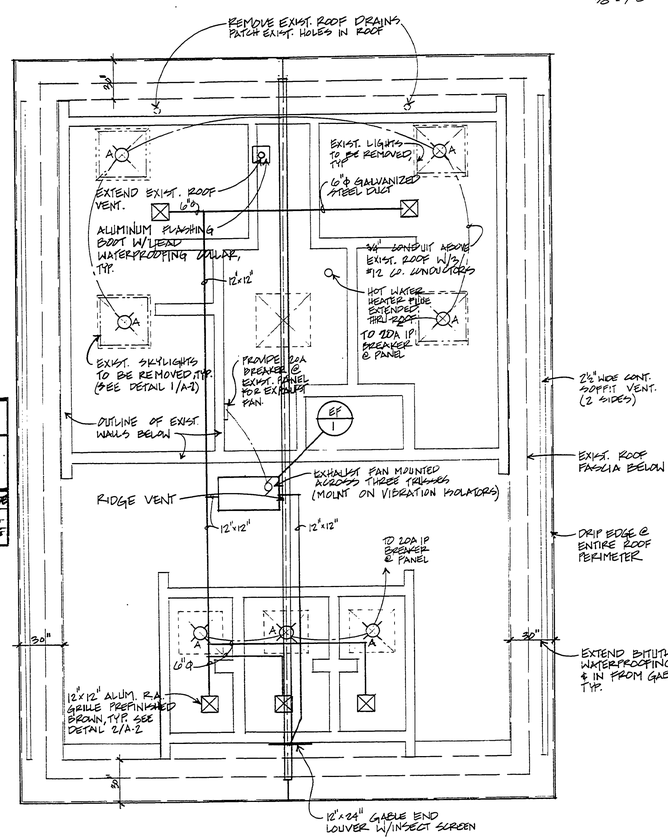


PLAN NORTH
ROOF PLAN & MECH/ELECT. PLAN
(BUILDING 'A') SCALE: 1/4"=1'-0"

EXTEND EXISTING ROOF VENTS TO PENETRATE ROOF @ LOCATIONS SHOWN & FLASH COMPLETELY W/ LEAD FLASHING

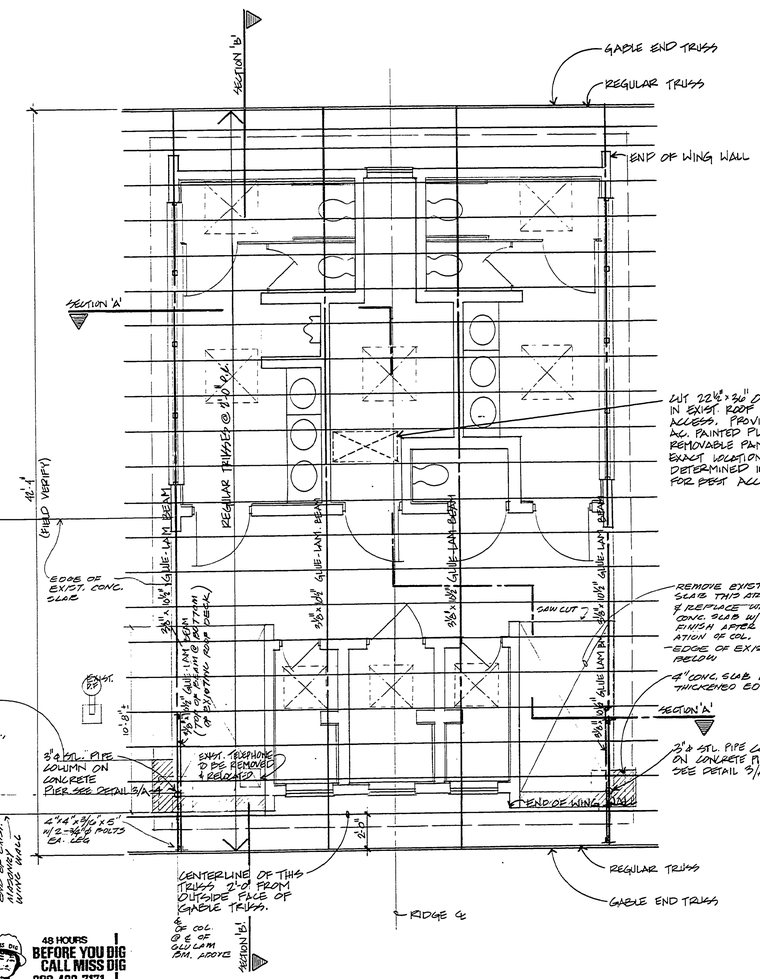


48 HOURS BEFORE YOU DIG CALL MISS DIG 800-482-7171 (TOLL FREE)

PLAN NORTH
ROOF FRAMING PLAN (& SLAB REVISION PLAN)
(BUILDING 'A') SCALE: 1/4"=1'-0"

NOTE: 1. CONC. SLABS TO BE REINF. W/ 6"x6" x1.4 x 1.4 WWF.
2. LOCATE CONTROL JOINTS 4'-0" O.C.


Bernath–Coakley Associates Architects, Inc.
4104 W. St. Joseph Hwy.
Lansing, Michigan 48917
(517)321-9525


STATE OF MICHIGAN
DEPARTMENT OF MANAGEMENT AND BUDGET
Office of Facilities

STATE PARK IMPROVEMENTS/PROTECTING MICHIGAN'S FUTURE ACCT. NO. 607-75-2450-400

REROOF TOILET & SHOWER BUILDINGS
MUSKEGON STATE PARK
STATE OF MICHIGAN
DEPARTMENT OF NATURAL RESOURCES
PARKS DIVISION

BUILDING 'A'
Revisions

Date
SEPT. 9, 1991
Comm. No.
9136
Sheet No
A2