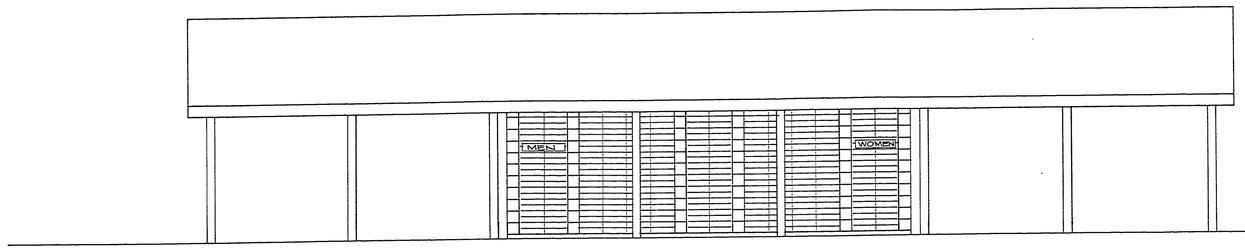

SOUTH ELEVATION
SCALE: 1/4" = 1'-0"

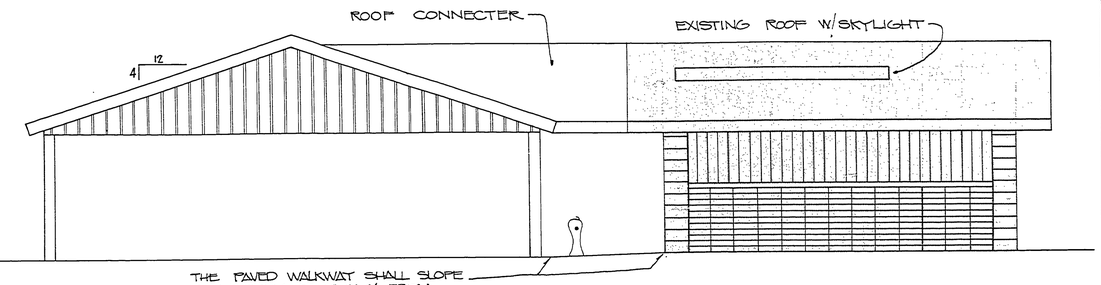

THE PAVED WALKWAY SHALL SLOPE A MINIMUM OF 2" IN 6' FROM TOILET BUILDING FLOOR TO THE SHELTER SLAB.

EAST ELEVATION
SCALE: 1/4" = 1'-0"

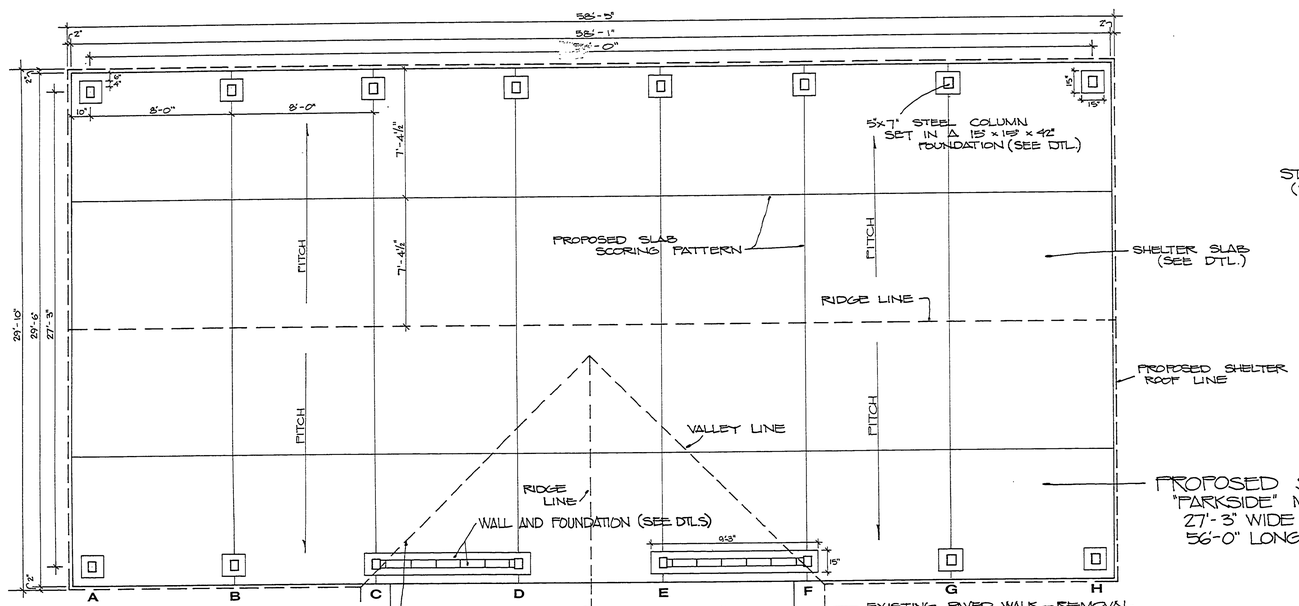

PROPOSED SHELTER
"PARKSIDE" MODEL #30
27'-3" WIDE ℄ COL. TO ℄ COL.
56'-0" LONG ℄ COL. TO ℄ COL.

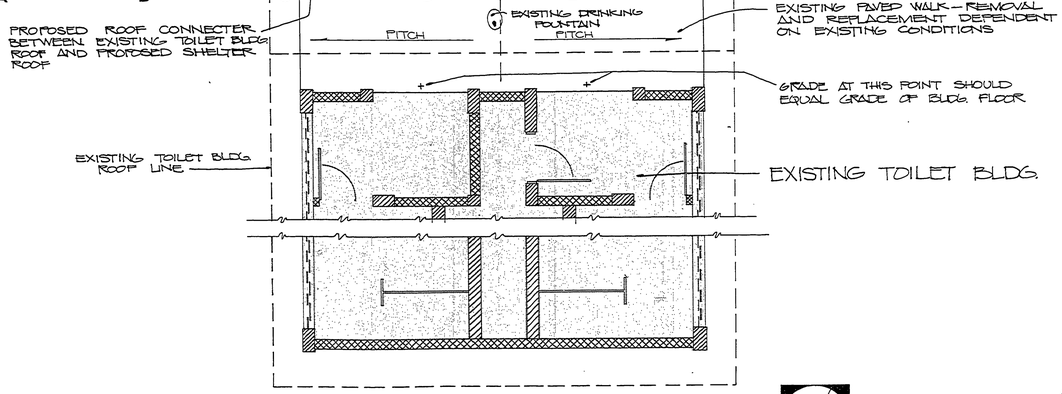

TOILET BLDG. AND SHELTER PLAN
SCALE: 1/4" = 1'-0"

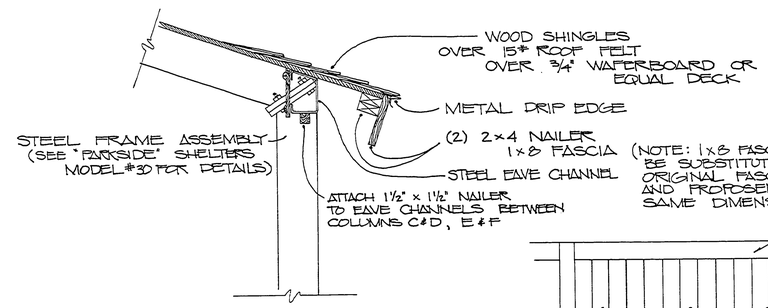

(NOTE: 1x8 FASCIA BOARD MUST BE SUBSTITUTED FOR THE 1x4 ORIGINAL FASCIA SO THAT EXISTING AND PROPOSED FASCIA ARE THE SAME DIMENSION)

EAVE DETAIL
SCALE: 1" = 1'-0"

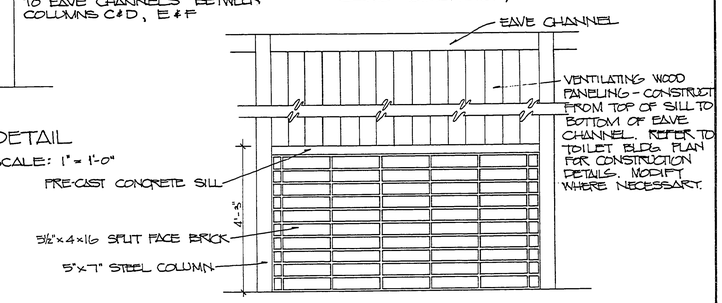

WALL DTL. FOR COLUMNS C&D, E&F
SCALE: 1/2" = 1'-0"

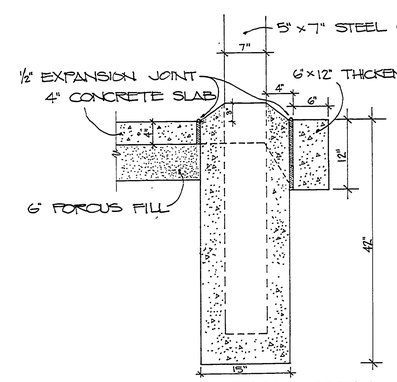

FOUNDATION DETAIL
SCALE: 1" = 1'-0"

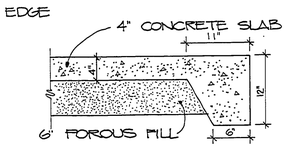

SLAB W/THICKENED EDGE
SCALE: 1" = 1'-0"

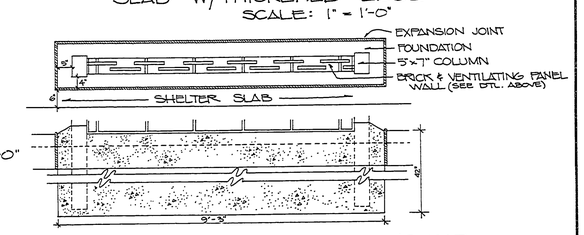

FOUNDATION DTL. FOR COLUMNS C&D, E&F SCALE: 1/2" = 1'-0"

REVIEWED BY: [signature] IN CHARGE, PROGRAM PLANNING — 11-14-79 DATE

APPROVED BY: [signature] CHIEF, PARKS DIVISION — 11-14-79 DATE

SURVEYED BY		DRAWN BY CHAPMAN	10/79	NO.	DATE	BY	REVISIONS	NO.	DATE	BY	REVISIONS	MICHIGAN DEPARTMENT OF NATURAL RESOURCES	PICNIC SHELTER & ROOF ATTACHMENT TO EXISTING TOILET BLDG. SHEET TITLE
DESIGNED BY		CHECKED BY R.G.H.	11/79	1.				3.					
	DATE		DATE	2.				4.					

MUSKEGON STATE PARK — AREA OR PARK
PROJECT NO.
PROJECT
SHEET 1 OF 1
PLAN NO. L-124

N61080