R-1683 IMAGE MEDIA 28-32-01 250 8-83 6948F

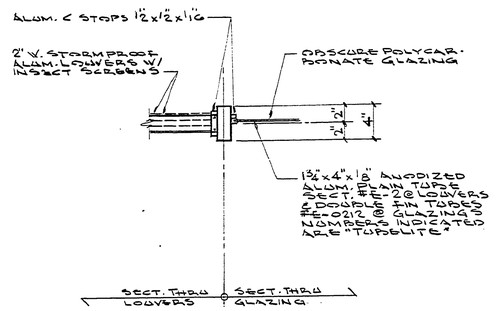

• SECTION • 20 / 13|16 1½": ONE FOOT

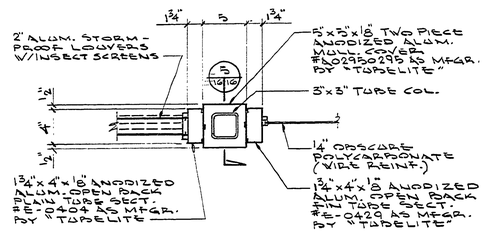

• SECTION • 4 / 13|16 1½": ONE FOOT

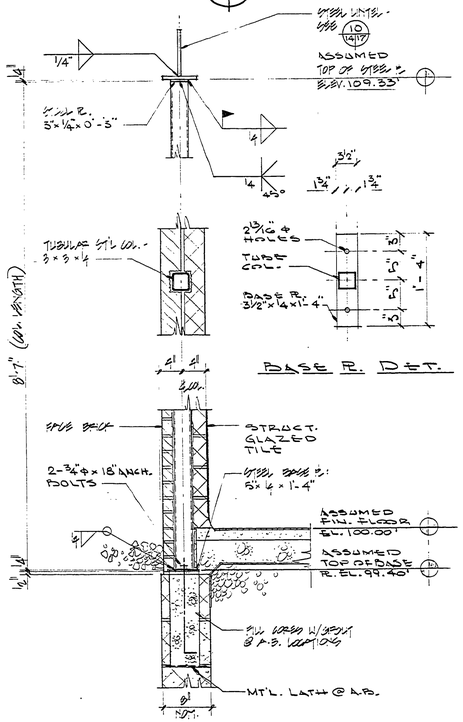

BASE R. DET.

• SECTION • 5 / 16|16 1": ONE FOOT

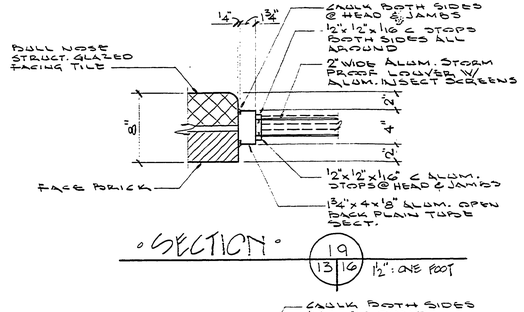

• SECTION • 19 / 13|16 1½": ONE FOOT

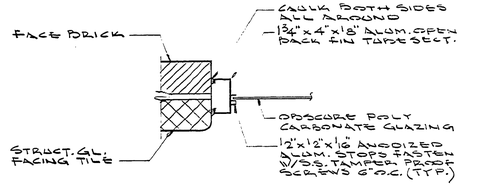

• SECTION • 18 / 13|16 1½": ONE FOOT

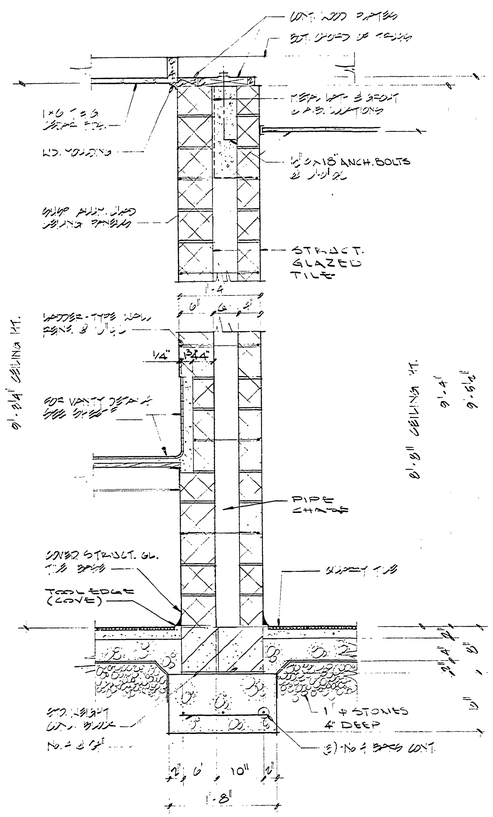

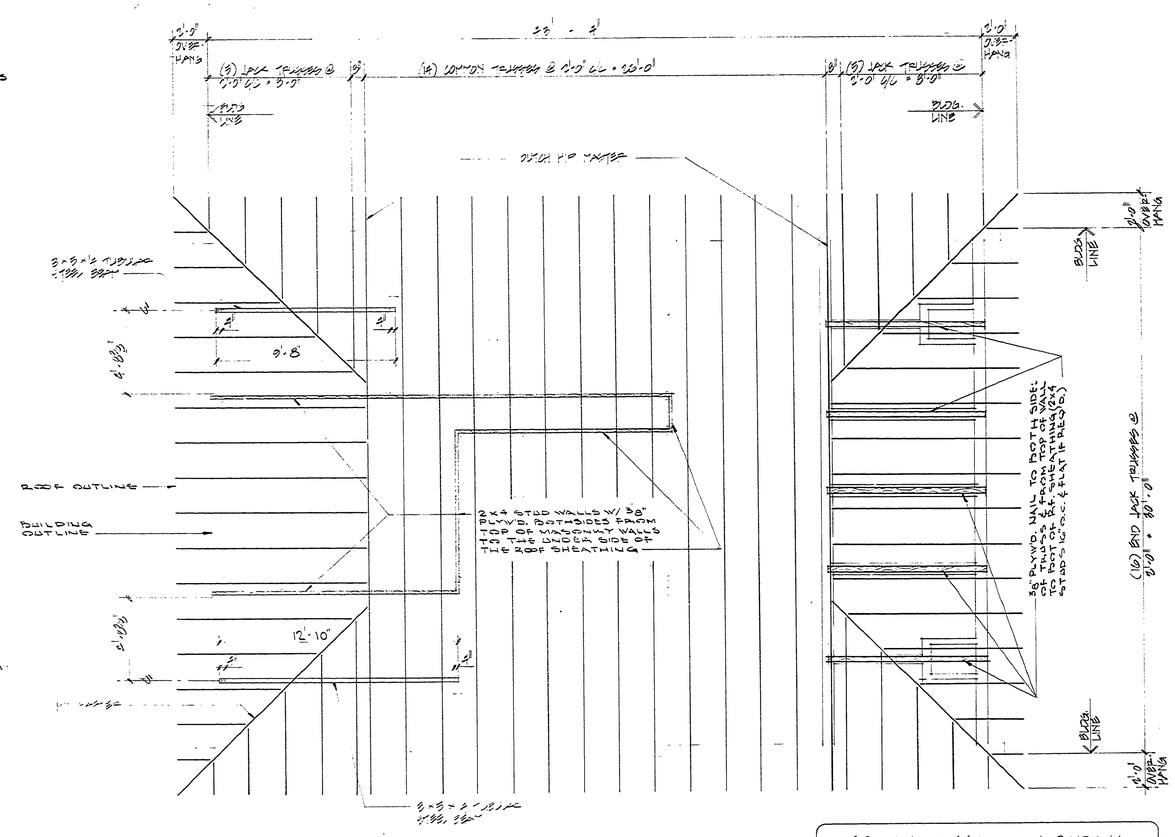

• ROOF FRAMING PLAN •
1": ONE FOOT

TRUSS DESIGN LOADING

LIVE LOAD ... 40 psf
DEAD LOAD ... 10 psf
TOTAL LOAD ... 50 psf

• 15% ALLOWABLE STRESS INCREASE IN LUMBER FOR LIVE LOAD ONLY.

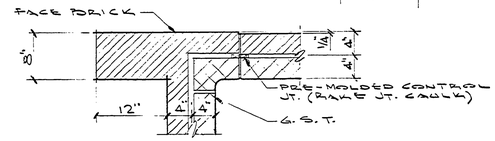

• SECTION • 22 / 14|16

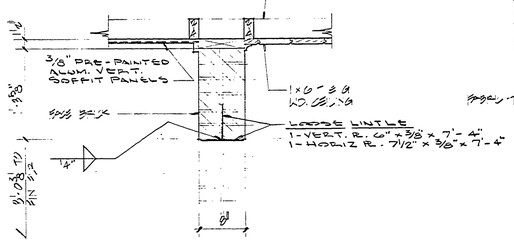

• SECTION • 7 / 14|16

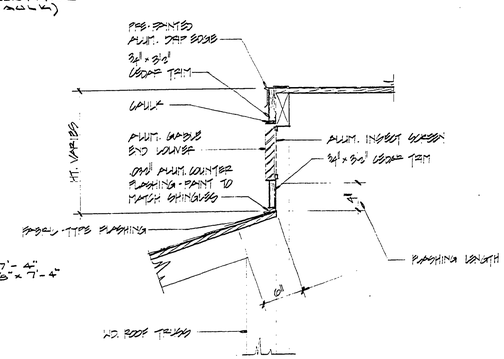
PRE-PAINTED ALUM. DRIP EDGE
3/4" x 3/4" EDGE TRIM
CAULK
ALUM. INSECT SCREEN
3/4" x 3/4" EDGE TRIM
PLYWD. PLANK
PLYWD. WALL
PLYWD. PLANK
PLYWD. WALL
PLYWD. PLANK
PLYWD. WALL