CONTRACTOR TO PROVIDE 9 - 3/4" I.D. 2" O.D. WASHERS FOR USE UNDER PADLOCK WITH GRATING TYPE COVER.

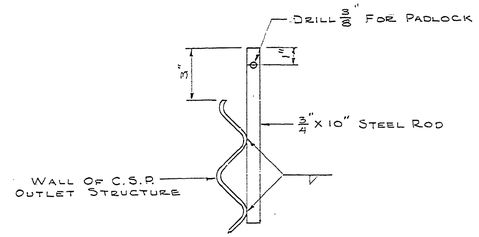

SECTION B-B

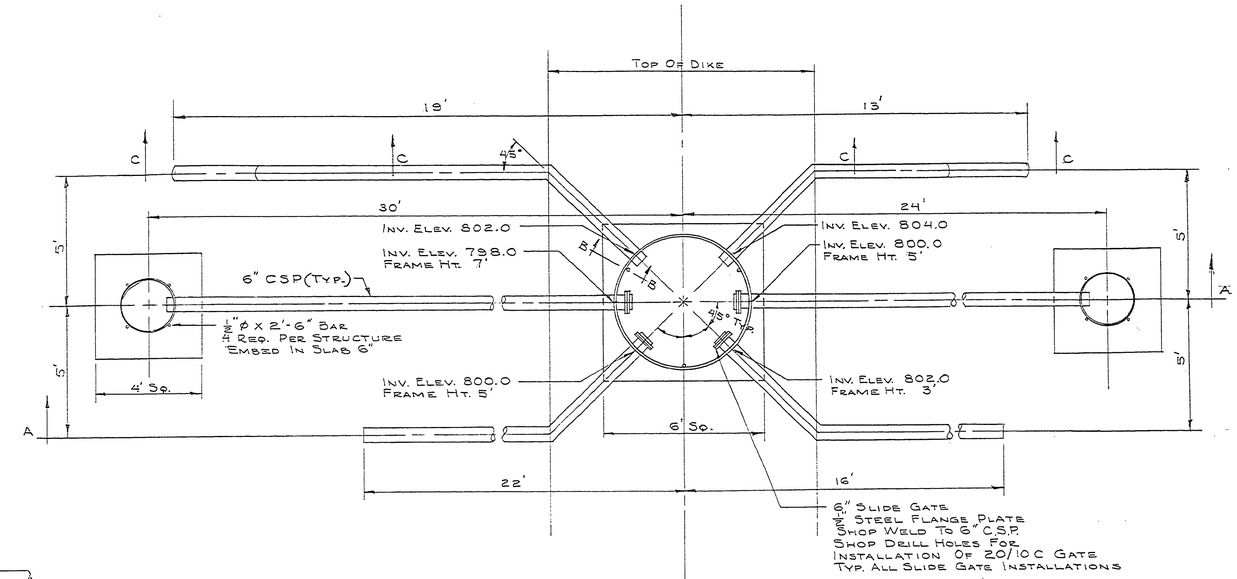

OUTLET CONTROL STRUCTURE

PLACE DOWELL SOIL SEALANT OR AN APPROVED EQUAL ON PREPARED LAGOON SIDES & BOTTOM. DISK, COMPACT & COVER WITH PROTECTIVE SAND, OR TOPSOIL LAYER AS NOTED ON PLANS AND PER MANUFACTURERS SPECIFICATIONS.

PLACE 3" TOPSOIL, SEED, FERTILIZE & MULCH ON DIKES & ALL DISTURBED AREAS.

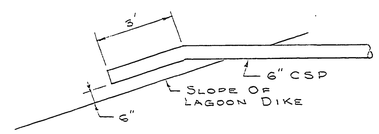

SECTION C-C

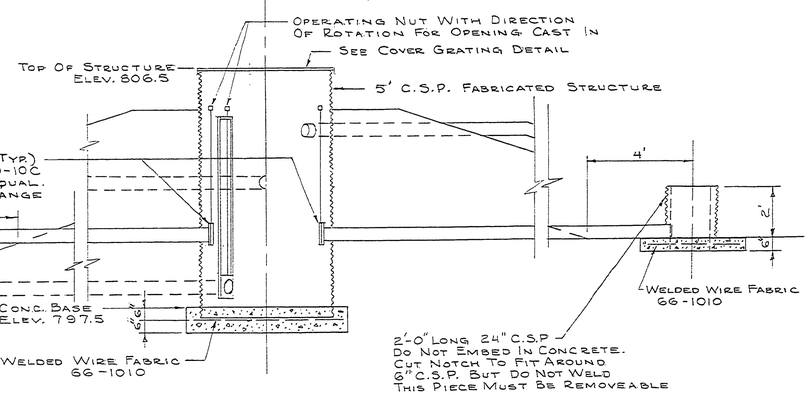

SECTION A-A

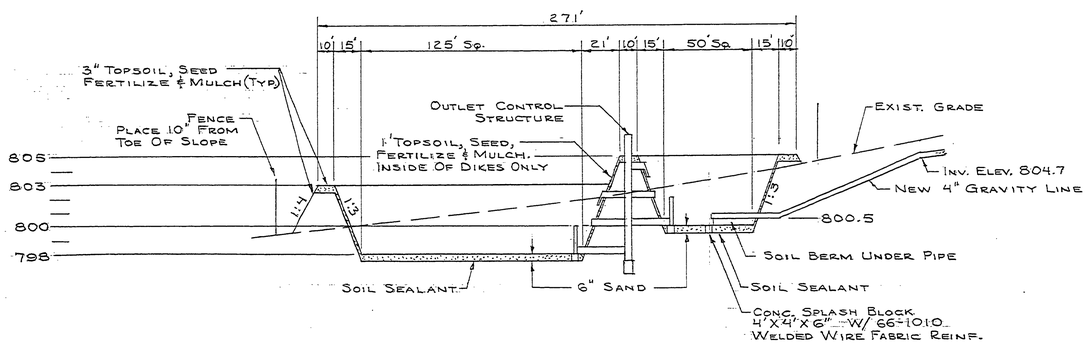

SECTION E-E
SEE SHEET 1

NOTES

SLIDE GATES TO HAVE FLAT BACKS WITH BACK SEAT MACHINED.

CONTRACTOR TO PROVIDE TWO STANDARD "T" OPERATING WRENCHES WITH 4' SHAFT LENGTH.

GATE FRAMES TO BE FASTENED AT TOP WITH 3/8" MACH. BOLTS TO C.S.P. STRUCTURE. USE WOOD BLOCK SHIMS TO KEEP FRAME AT UNIFORM DISTANCE FROM WALL.

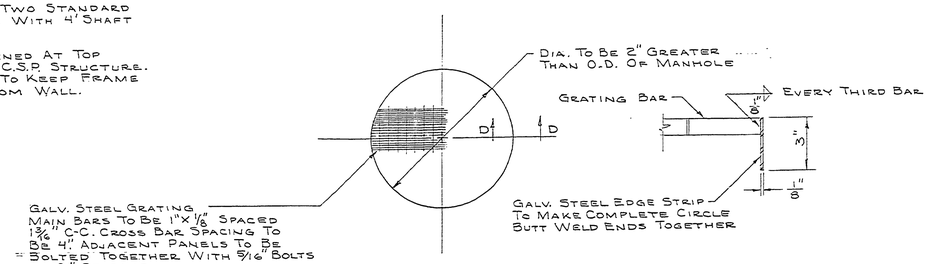

SECTION D-D

COVER GRATING DETAIL

SURVEYED BY		DRAWN BY J. YPMA	8-78	NO.	DATE	BY	REVISIONS	NO.	DATE	BY	REVISIONS	MICHIGAN DEPARTMENT OF NATURAL RESOURCES	CONTROL STRUCTURE DETAILS AND LAGOON PROFILE
DESIGNED BY R.H. MERRILL	9-78	CHECKED BY		1.				3.					SHEET TITLE
	DATE		DATE	2.				4.					

AREA OR PARK: SLEEPY HOLLOW STATE PARK
PROJECT: SERVICE AREA SEWAGE DISPOSAL
PROJECT NO. 21-9689
SHEET 2 OF 2
PLAN NO. E-112