R-1638 COMMERCIAL BLUEPRINT SERVICE 500 11-74 94602

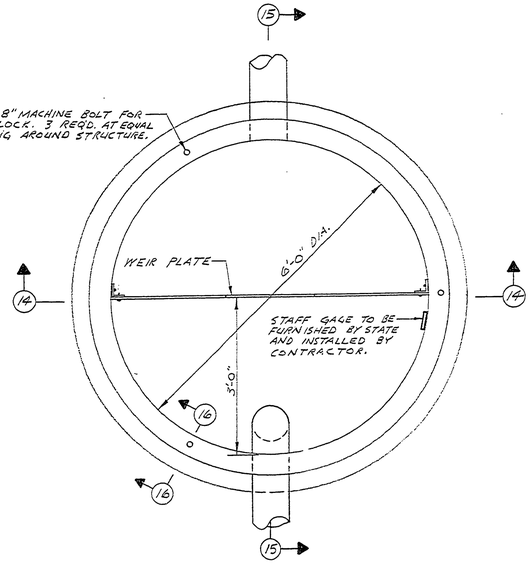

PLAN OF FLOW METER STRUCTURE

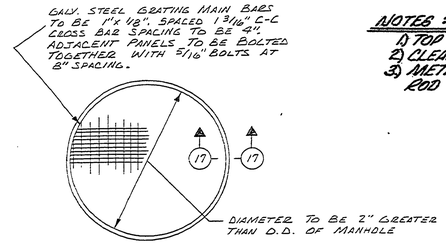

PLAN OF COVER GRATING

APPLIES TO: OUTLET CONTROL STRUCTURES A&B (2 REQ'D)
FLOW METER STRUCTURE (1 REQ'D)

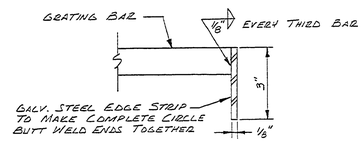

SECTION 17-17

NOTES:
1) TOP STEP TO BE 1'-6" BELOW TOP OF CASTING.
2) CLEAR LENGTH OF STEPS SHALL BE 16" MIN.
3) METAL STEPS SHALL BE 3/4" MIN. DIA. STEEL ROD OR EQUIVALENT MATERIAL.

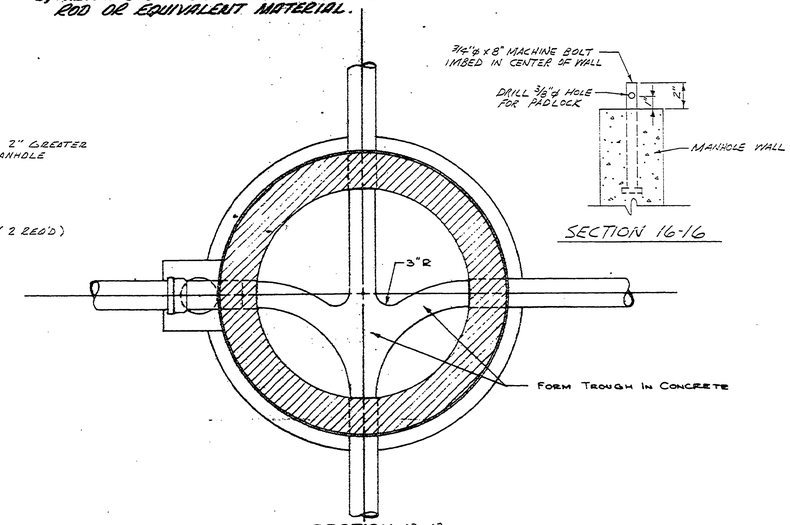

SECTION 16-16

SECTION 13-13

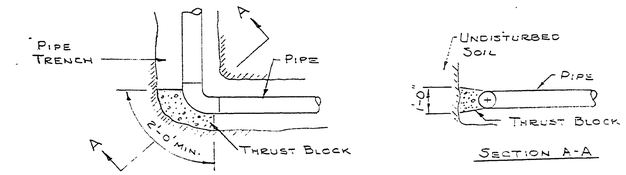

SECTION A-A

FORCE MAIN
THRUST BLOCK DETAILS

NOTES
1) POUR CONC. THRUST BLOCKS TO BEAR ON UNDISTURBED SOIL (EXCEPT VERTICAL BENDS)
2) PLACE THRUST BLOCKS AT ALL ALIGNMENT CHANGES WHERE INDICATED BY ■ ON PLANS.
3) BLOCKS TO BE A MIN. OF 4 CU. FT. & 3000 PSI, 28 DAY STRENGTH CONC.

HEAD-DISCHARGE
RELATIONSHIP FOR WEIR

HEAD*	DISCHARGE*
0.1	1.00
0.2	1.31
0.3	1.54
0.4	1.73
0.5	1.89
0.6	2.04
0.7	2.17
0.8	2.29

* HEAD MEASURED IN FEET ABOVE BOTTOM OF NOTCH. DISCHARGE IN CUBIC FEET/SEC.

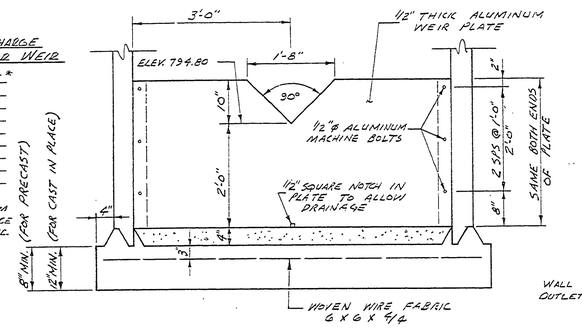

SECTION 14-14

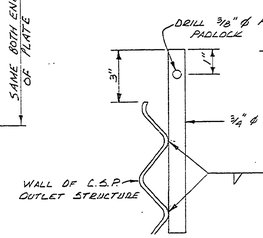

NOTE:
CONTRACTOR TO PROVIDE 9- 3/4" I.D. 2" O.D. WASHERS FOR USE UNDER PADLOCKS WITH GRATING TYPE COVERS.

SECTION 18-18
THIS DETAIL TYP. AT 6 BOLT LOCATIONS

MIN. WALL THICKNESS

M. H. DEPTH	BRICK	CONC. BLOCK	PRECAST CONC.
0'-10'	8"	6"	6"
10'-15'	12"	8"	8"
15'-25'	16"	12"	12"

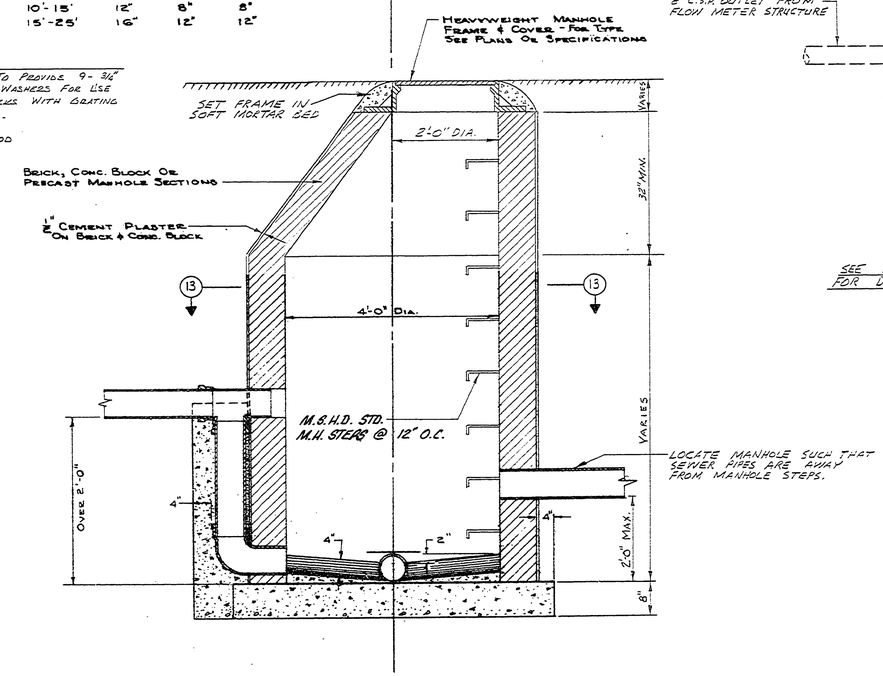

STANDARD MANHOLE

NOTE:
IF NECESSARY USE MANHOLE RINGS OR MANHOLE CONCRETE BLOCKS TO BRING TOP OF MANHOLE TO REQUIRED GRADE.

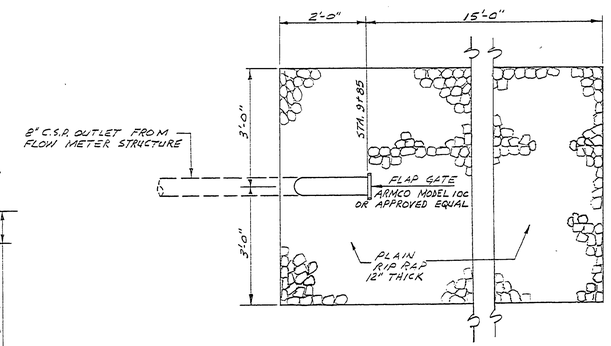

DETAIL B

SEE SHEET NO. 4 FOR DETAIL LOCATION

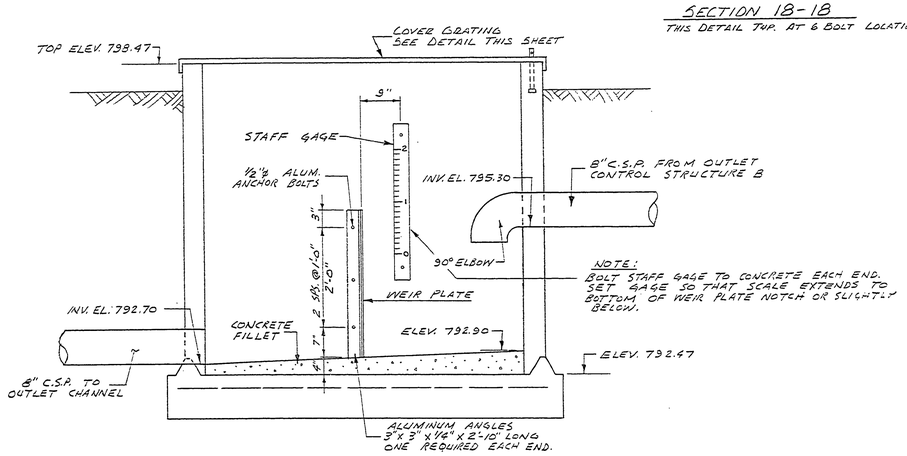

NOTE:
BOLT STAFF GAGE TO CONCRETE EACH END. SET GAGE SO THAT SCALE EXTENDS TO BOTTOM OF WEIR PLATE NOTCH OR SLIGHTLY BELOW.

SECTION 15-15

SURVEYED BY		DRAWN BY B. BOYCE	3-76	NO.	DATE	BY	REVISIONS	NO.	DATE	BY	REVISIONS	MICHIGAN DEPARTMENT OF NATURAL RESOURCES	SLEEPY HOLLOW STATE PARK (AREA OR PARK) — PROJECT NO. 21-9542
DESIGNED BY R. HAEUSLER	3-76	CHECKED BY		1.				3.				SEWAGE STRUCTURE DETAILS (SHEET TITLE)	SEWAGE SYSTEM (PROJECT) — SHEET 6 OF 10
	DATE		DATE	2.				4.					PLAN NO. E-107