R-1638 COMMERCIAL BLUEPRINT SERVICE 300 11-74 SP402*

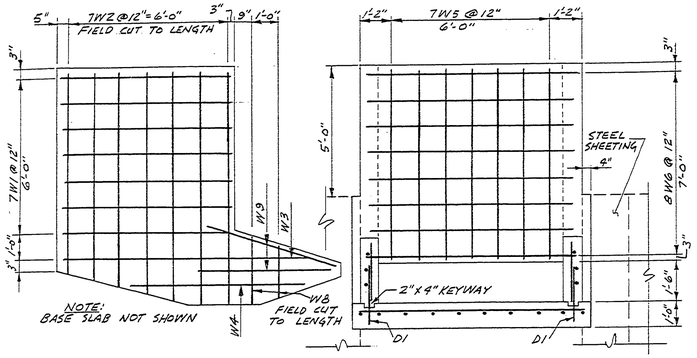

ELEVATION B-B
SCALE: 3/8" = 1'-0"

SECTION C-C
SCALE: 3/8" = 1'-0"

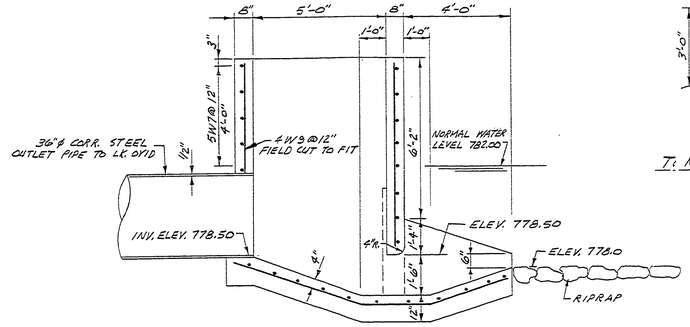

SECTION A-A
SCALE: 3/8" = 1'-0"

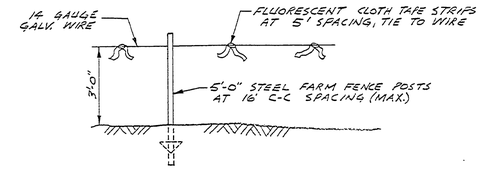

GAS LINE
TEMPORARY PROTECTIVE FENCE
DETAIL

NOTE:
THE EXISTING HIGH PRESSURE GAS PIPELINES SHALL BE PROTECTED AGAINST DAMAGE AT ALL TIMES DURING CONSTRUCTION. CROSSING OF GAS LINES WITH HEAVY EQUIPMENT SHALL BE ALLOWED ONLY AT POINTS THAT HAVE BEEN FULLY PROTECTED BY THE CONTRACTOR IN ACCORDANCE WITH SPECIFICATION REQUIREMENTS. PROTECTIVE FENCING SHALL BE MAINTAINED INTACT THRU THE JOB AREA EXCEPT FOR THESE APPROVED CROSSING POINTS. *

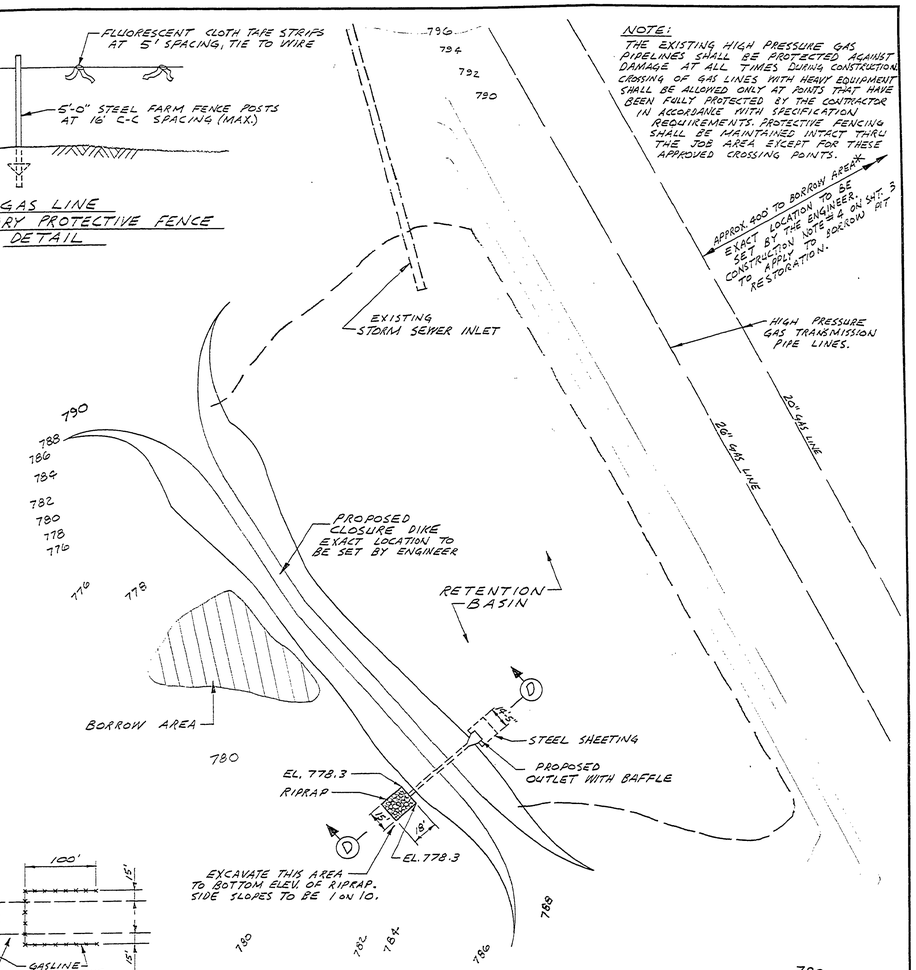

OUTLET STRUCTURE AND
CLOSURE DIKE - SITE PLAN
SCALE: 1" = 50'

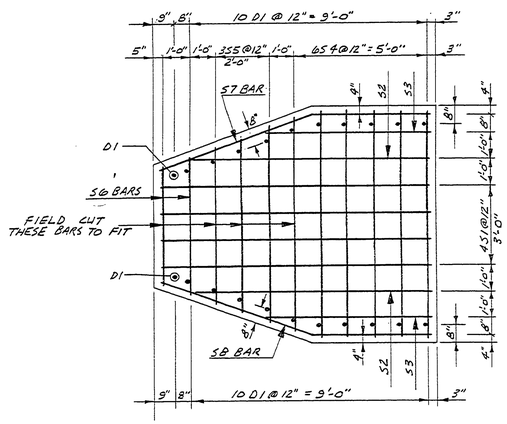

OUTLET STRUCTURE
BASE SLAB - REINFORCING PLAN
SCALE: 3/8" = 1'-0"

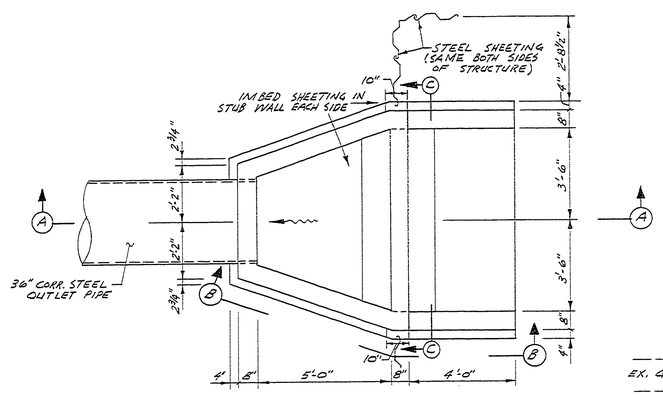

OUTLET STRUCTURE - PLAN VIEW
SCALE: 3/8" = 1'-0"

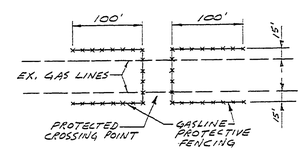

FENCING LAYOUT DETAIL

NOTE: TOPSOIL USED FOR COVERING RETENTION DIKE TO BE CONTRACTOR FURNISHED.

BORROW AREA DESCRIPTION *
PROPOSED BORROW AREA IS NORTH-SOUTH RIDGE JUST WEST OF OLD UPTON ROAD. SIDE SLOPES ARE APPROX. 1 ON 10. REMOVE BORROW FROM PORTION OF RIDGE IN OPEN AREA LEAVING TREES ALONG THE OLD ROADWAY.

BENDING DIAGRAMS

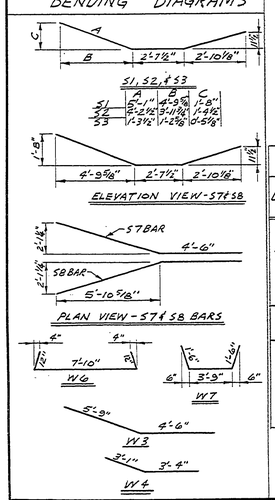

BAR SCHEDULE

LOCATION	STRAIGHT BARS MARK	NO.	SIZE	LENGTH	BENT BARS MARK	NO.	SIZE	LENGTH
BASE SLAB	S4	6	#4	8'-8"	S1	4	#4	10'-8½"
	S5	3	#4	7'-6"	S2	2	#4	9'-10"
	S6	2	#4	5'-5"	S3	2	#4	6'-11"
					S7	2	#4	10'-9½"
DOWELS	D1	22	#4	2'-4"				
WALLS	W1	14	#4	6'-4"	W3	2	#4	10'-3"
	W2	14	#4	8'-10"	W4	2	#4	6'-5"
	W5	7	#4	7'-2"	W6	8	#4	9'-10"
	W8	4	#4	3'-0"	W7	5	#4	6'-9"
	W9	8	#4	5'-0"				

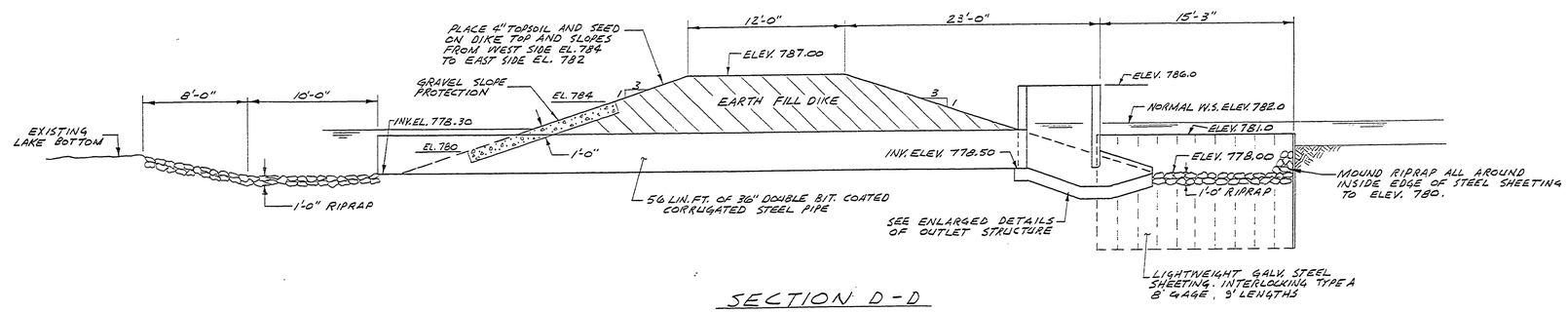

SECTION D-D

SURVEYED BY		DRAWN BY B. BOYCE	11-'75	NO.	DATE	BY	REVISIONS	NO.	DATE	BY	REVISIONS	MICHIGAN DEPARTMENT OF NATURAL RESOURCES	STORM WATER RETENTION BASIN	SLEEPY HOLLOW STATE PARK	PROJECT NO. 21-9542
DESIGNED BY R. HAEUSLER	11-'75	CHECKED BY		1.				3.					SHEET TITLE	AREA OR PARK	SHEET 9 OF 10
	DATE		DATE	2.				4.						SEWAGE SYSTEM PROJECT	PLAN NO. E-107