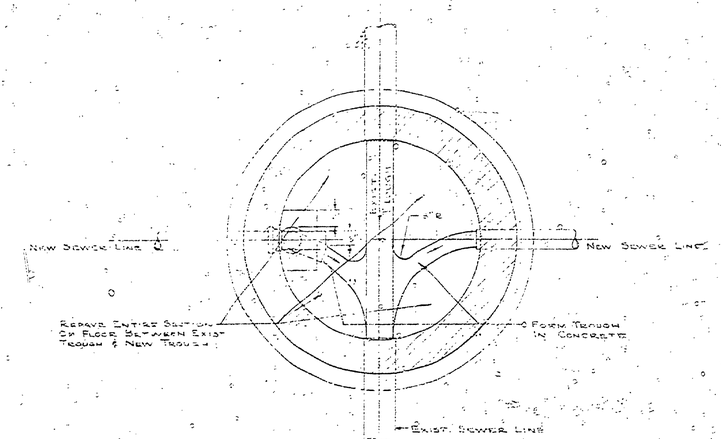

SECTION A-A

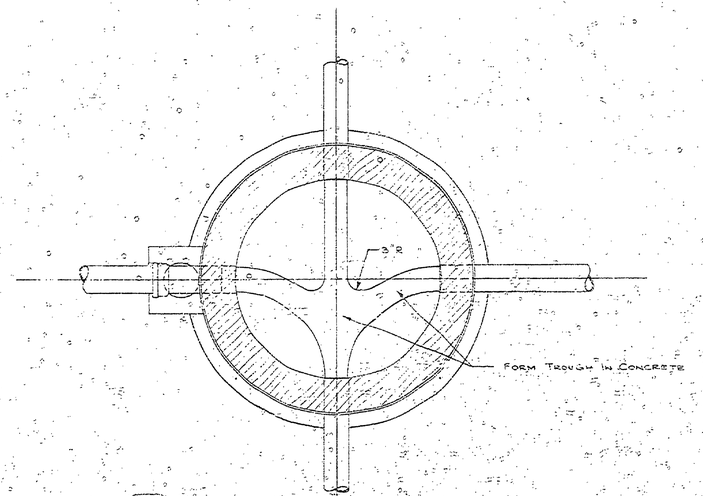

SECTION A-A

MIN. WALL THICKNESS

M.H. DEPTH	BRICK	CONC. BLOCK	PRECAST CONC.
0'-10'	8"	8"	6"
10'-15'	12"	8"	8"
15'-25'	16"	12"	12"

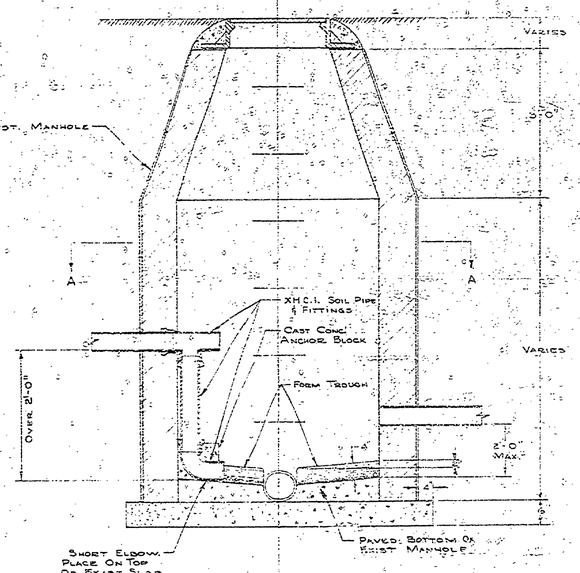

STANDARD CONNECTION AT EXISTING MANHOLE

SCALE $\frac{3}{4}$"=1'-0"

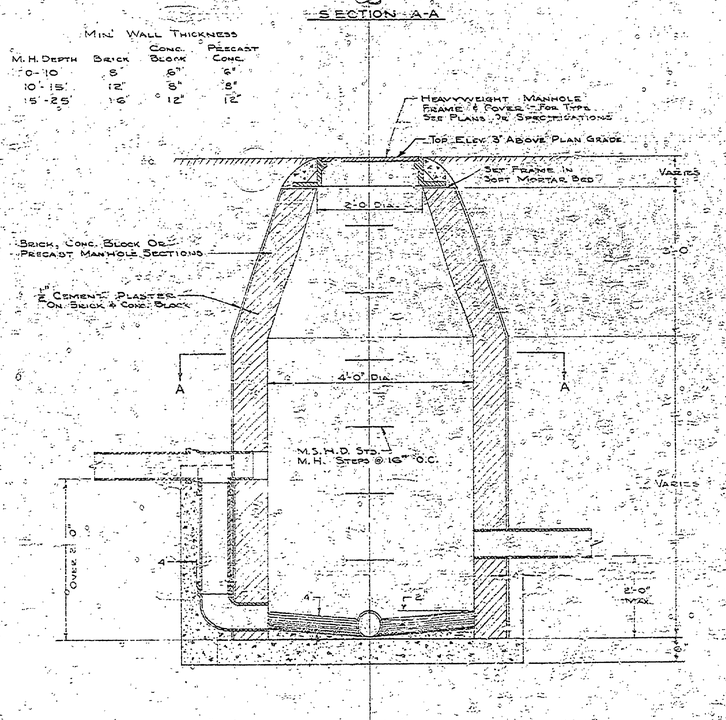

STANDARD MANHOLE (NEW CONSTRUCTION)

SCALE $\frac{3}{4}$"=1'-0"

REVISIONS					
NO.	DATE	BY	NO.	DATE	BY
1			4		
2			5		
3			6		

APPROVED	DATE
DIRECTOR OF PARKS	
CHIEF OF PLANNING AND DEVELOPMENT	
CHIEF OF ENGINEERING AND CONSTRUCTION	

REVIEWED	DATE
ARCHITECTURAL	
ENGINEERING	
LANDSCAPE	

	DATE
DESIGNED BY	
DRAWN BY	
CHECKED BY	

MICHIGAN
DEPARTMENT OF CONSERVATION
PARKS AND RECREATION DIVISION

STANDARD MANHOLE

FA 108-5124-300-031.C SHT. 7 OF 10

SHEET NO. 7 OF 10

PLAN NO. STANDARD DETAIL