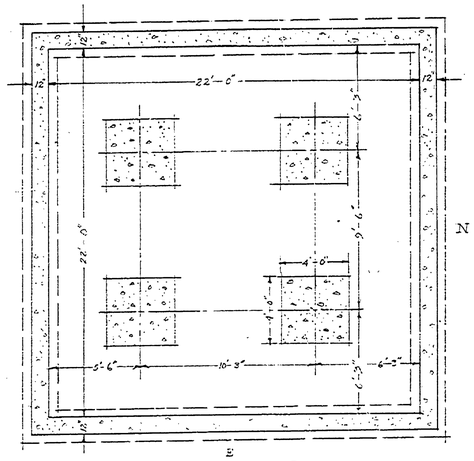

FOUNDATION PLAN
Scale 1/4"=1'-0"

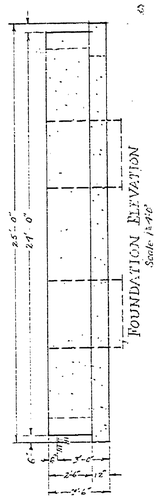

FOUNDATION ELEVATION
Scale 1/4"=1'-0"

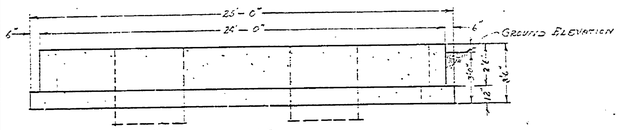

FOUNDATION ELEVATION
Scale 1/4"=1'-0"

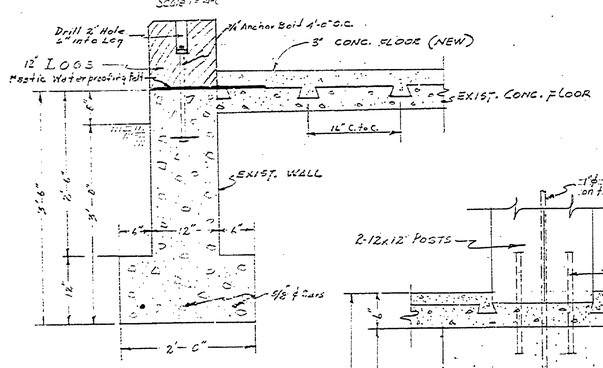

SECTION of WALL
Scale: 1"=1'-0"

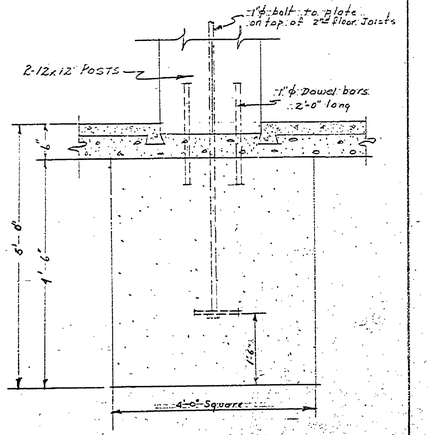

DETAILS-POST SUPPORTS
Scale: 3/4"=1'-0"

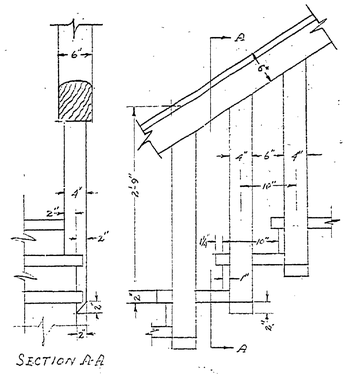

DETAILS-STAIR RAILING
Scale 1"=1'-0"

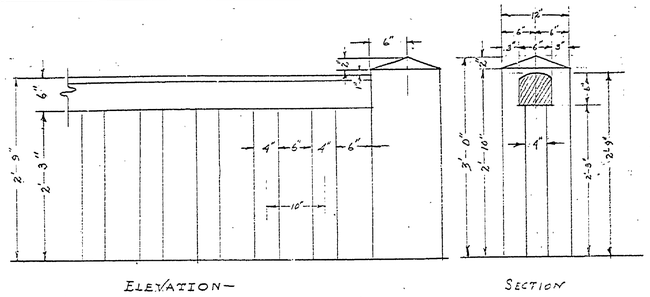

DETAILS-RAILING
SECOND FLOOR
Scale: 1/2"=1'-0"
Same Material as Wall Logs

OMIT THESE DETAILS

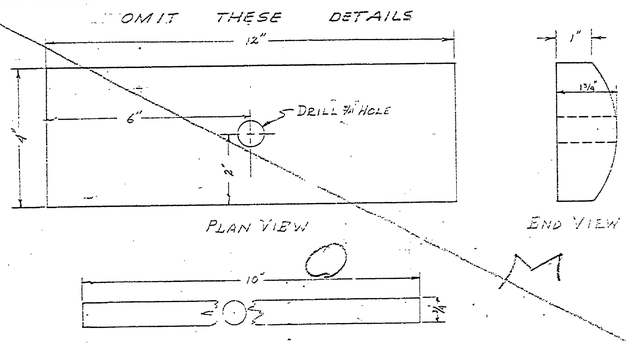

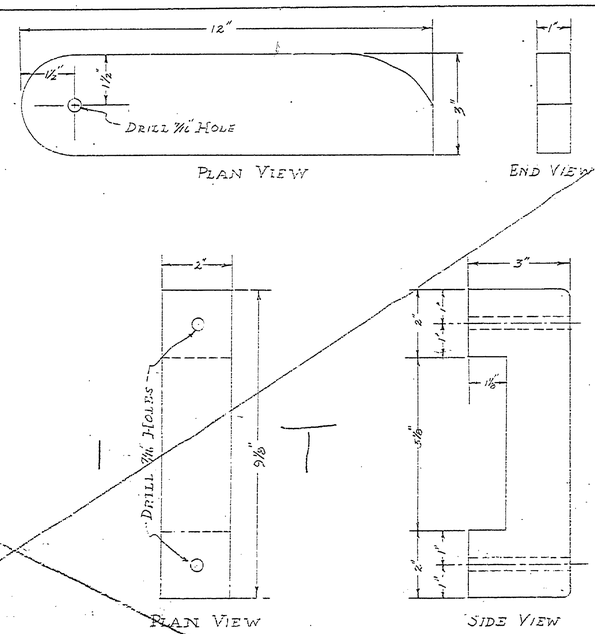

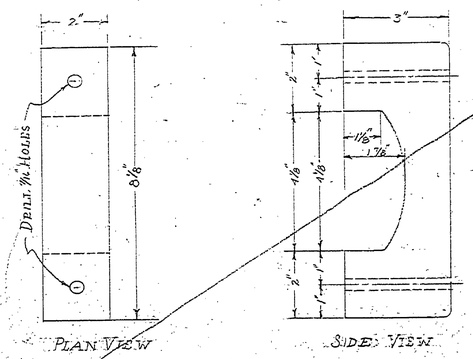

DETAILS-DOOR LATCH
Scale: 1"=2"
Material: Hard Maple

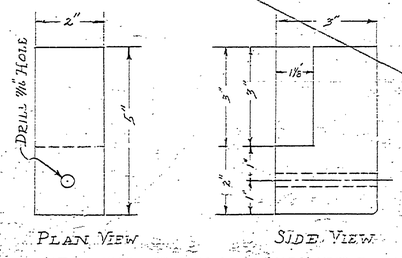

DETAILS-CANNON DOOR LATCH
Scale: 1"=2"
Material: Hard Maple

OMIT THESE DETAILS

A-94

INSURANCE No. 26

Muskegon

Drawn by: H.C.M.
Checked by:
Date: 4-1-31

Revisions: 11-23-33 H.C.M.
2-18-35 H.C.M.

SHEET 3

L2 PAGE 3 of 4 SHEETS

REVISIONS					
NO.	DATE	BY			
1	11/1/31	C.M.P.		4	
2				5	
3				6	

APPROVED	DATE

REVIEWED	DATE
ARCHITECTURAL	
ENGINEERING	
LANDSCAPE	

DATE	
DESIGNED BY	
DRAWN BY	
CHECKED BY	