R-1639 COMMERCIAL BLUEPRINT SERVICE 5-69

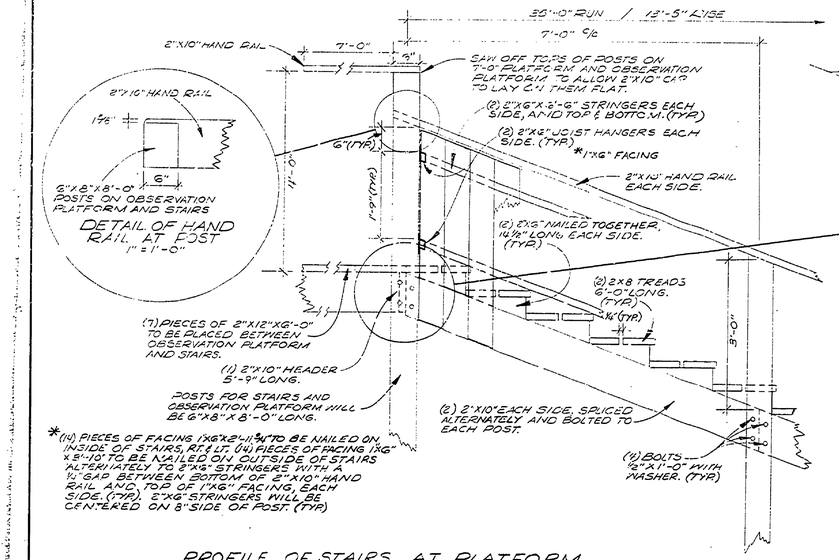

PROFILE OF STAIRS AT PLATFORM
3/4" = 1'-0"

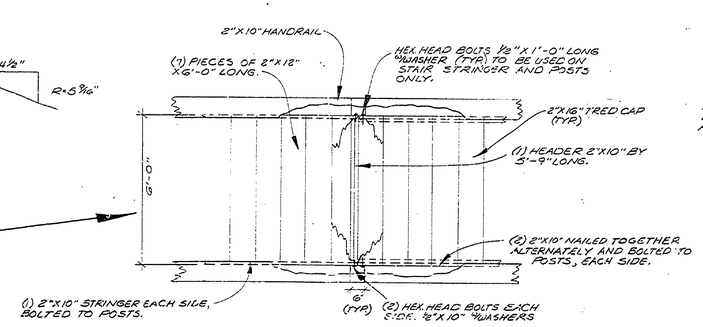

PLAN VIEW AT TOP OF STAIRS
3/8" = 1'-0"

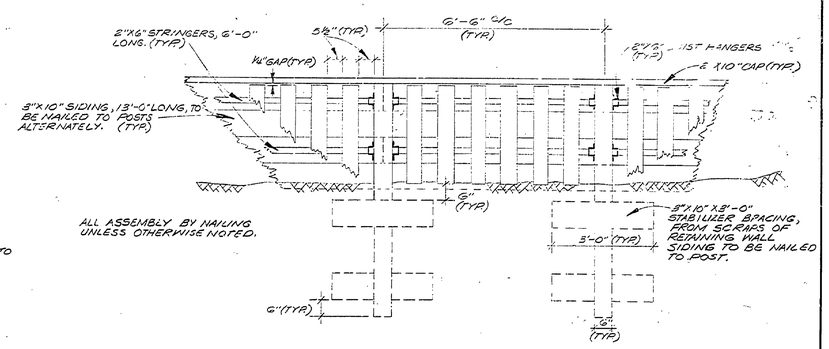

PROFILE SHOWING CONSTRUCTION OF RETAINING WALL AND POSTS
1/2" = 1'-0"

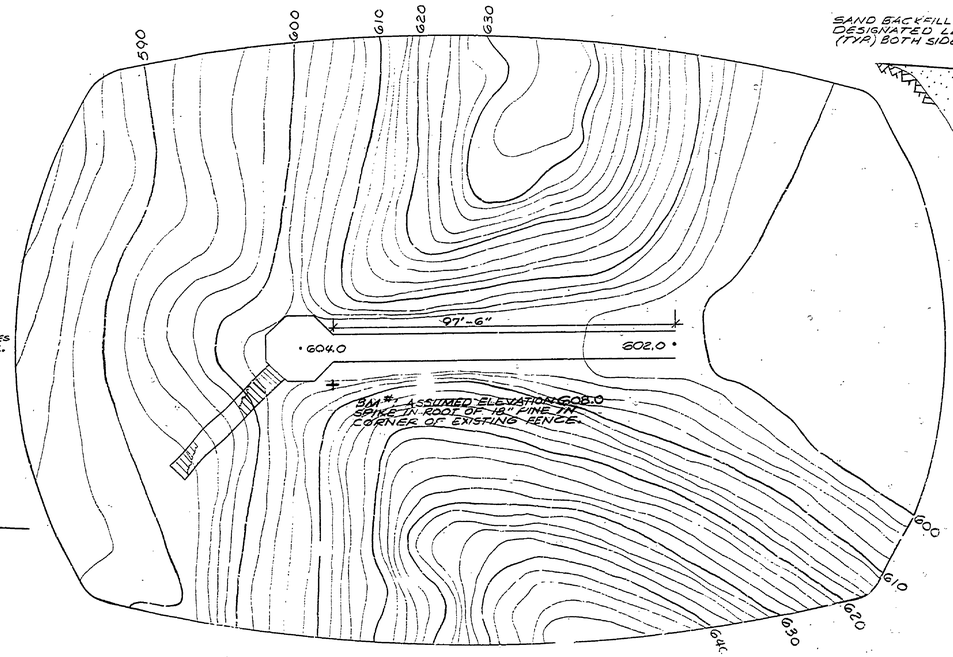

PLAN VIEW
3" = 100'

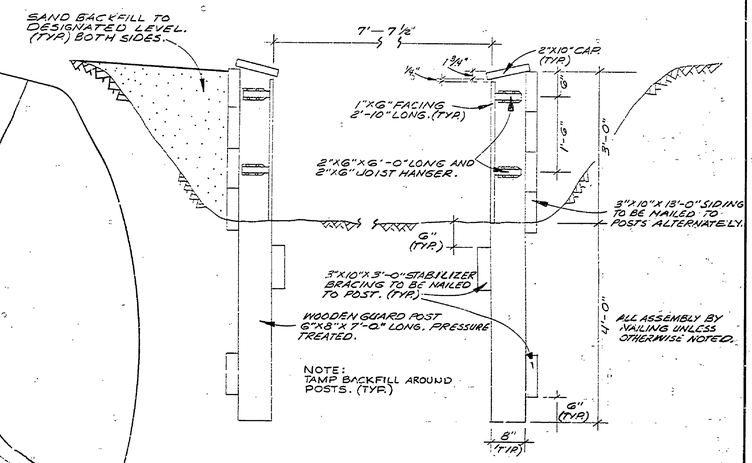

SECTION OF RETAING WALL & POST
3/4" = 1'-0"

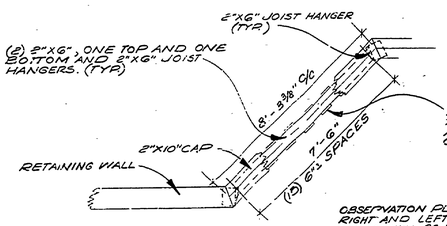

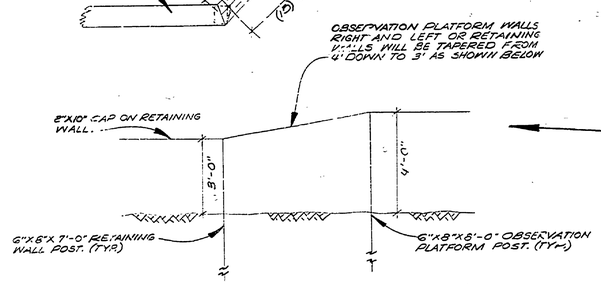

SECTION SHOWING RETAINING WALL AND OBSERVATION PLATFORM WALL CONNECTION
3/8" = 1'-0"

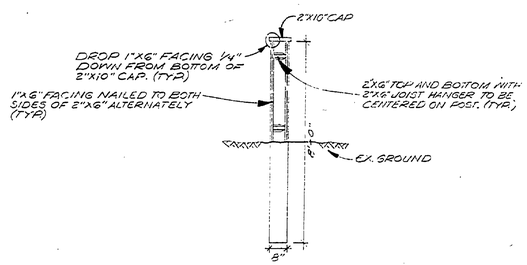

TYPICAL OBSERVATION PLATFORM POST
3/8" - 1'-0"

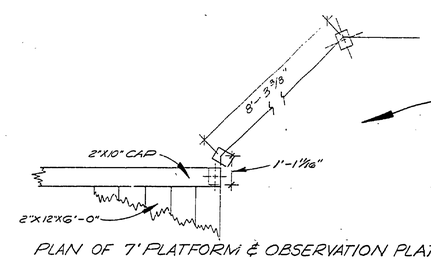

PLAN OF 7' PLATFORM & OBSERVATION PLATFORM POST CONNECTION
3/8" = 1'-0"

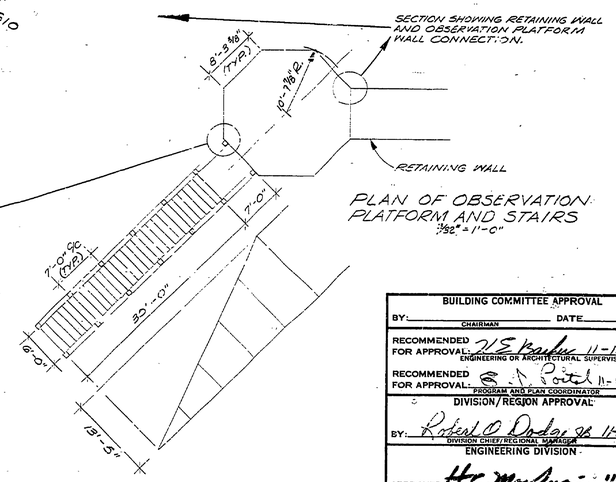

PLAN OF OBSERVATION PLATFORM AND STAIRS
3/32" = 1'-0"

BUILDING COMMITTEE APPROVAL	
BY: _____ CHAIRMAN	DATE _____
RECOMMENDED FOR APPROVAL: W E Barker ENGINEERING OR ARCHITECTURAL SUPERVISOR	DATE 11-18-70
RECOMMENDED FOR APPROVAL: S A Postel PROGRAM AND PLAN COORDINATOR	DATE 11-17-70
DIVISION/REGION APPROVAL	
BY: Robert O Dodge JB DIVISION CHIEF/REGIONAL MANAGER	DATE 11-27-70
ENGINEERING DIVISION	
APPROVED: H C MacLean CHIEF ENGINEER	DATE 11-30-70

SURVEYED BY		DRAWN BY MIKE STEVENS	11-3-70	NO.	DATE	BY	REVISIONS	NO.	DATE	BY	REVISIONS	MICHIGAN DEPARTMENT OF NATURAL RESOURCES	HOFFMASTER STATE PARK BEACH STEPS SHEET TITLE	AREA OR PARK	PROJECT NO. 24-1161
DESIGNED BY H. MERRILL M. STEVENS	11-3-70	CHECKED BY		1.				3.						PROJECT	SHEET 1 OF 1 PLAN NO. S-106
	DATE		DATE	2.				4.							