COMMERCIAL BLUEPRINT SERVICE 300 1-74 ETHEM

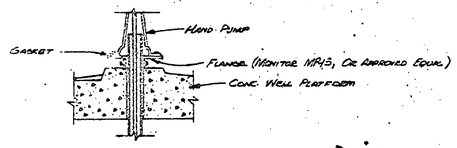

ALTERNATE PUMP MOUNTING

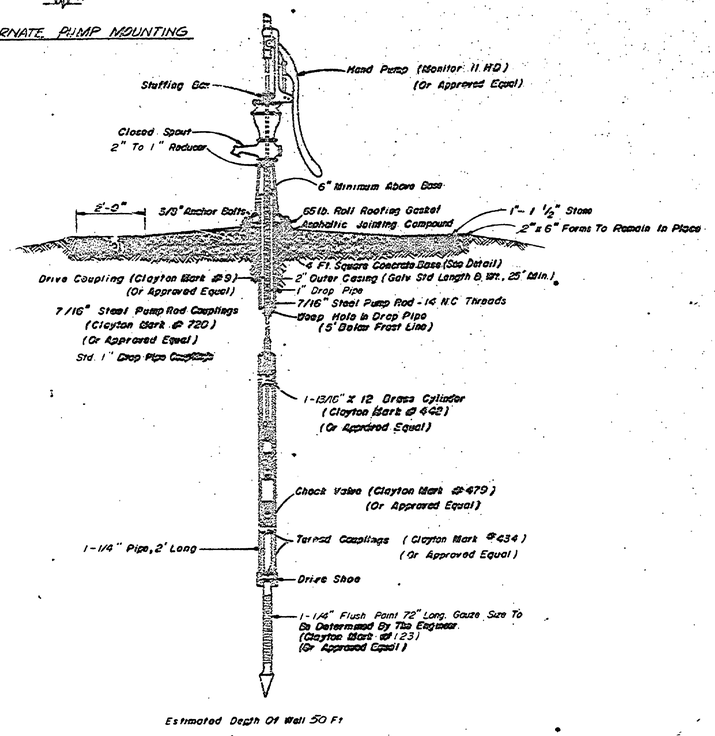

SECTION OF CAMPGROUND WELL (2")
(No Scale).

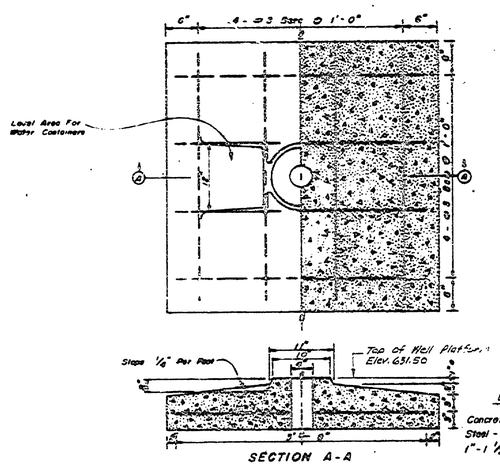

SECTION A-A

ESTIMATED QUANTITIES

Concrete	0.35 C.Y.
Steel - 8 - #3 @ 3'-8"	10 Lbs.
1"-1 1/2" Stone	1 C.Y.

REINFORCED CONCRETE WELL PLATFORM

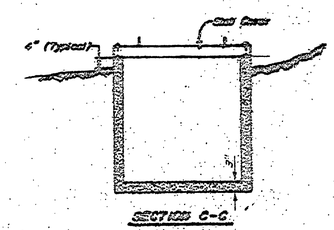

SECTION C-C

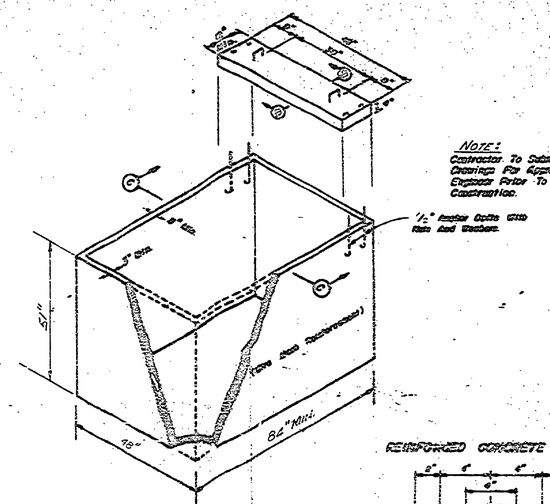

Note:
Grade A 5'x5' Landing
At Building Entrance
Not To Exceed 2% Grade
To Eliminate Any Step
Into Toilet Building

REINFORCED CONCRETE SLAB COVER

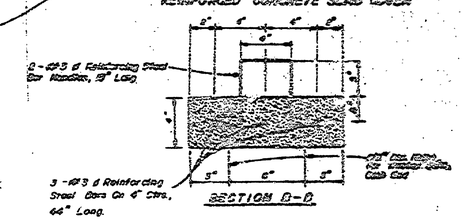

REINFORCED CONCRETE PIT TOILET VAULT & SLAB

SURVEYED BY	R. Boon	10-75	DRAWN BY		NO.	DATE	BY	REVISIONS	NO.	DATE	BY	REVISIONS	MICHIGAN DEPARTMENT OF NATURAL RESOURCES	WELL & PLATFORM DETAILS PIT TLT. VAULT & SLAB DETAILS SHEET TITLE	P.J. HOFFMASTER STATE PARK AREA OR PARK	PROJECT NO. 21-9660
DESIGNED BY		DATE	CHECKED BY	DATE	1.				3.						NORTH & SOUTH PICNIC AREA DEVELOPMENT PROJECT	SHEET 4 OF 4 PLAN NO. E-111
					2.				4.							