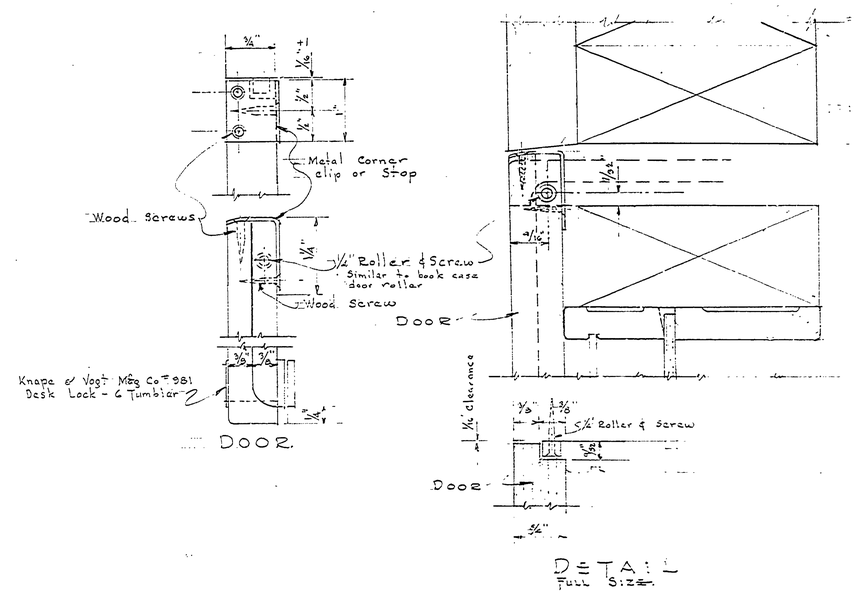

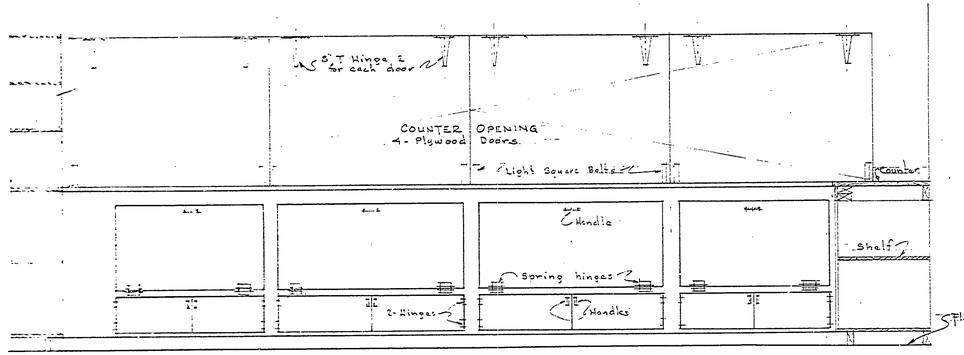

ELEVATION OF COUNTER CONCESSIONAIRE SIDE
Scale 3/4" = 1'-0"

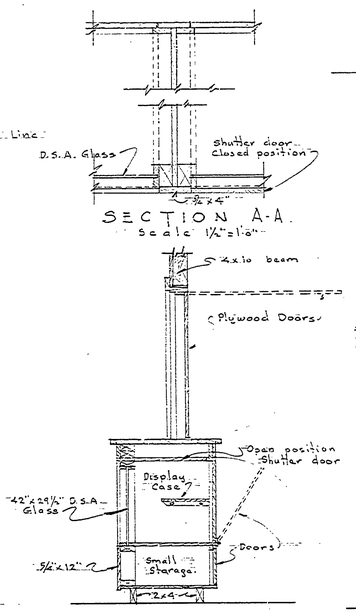

SECTION A-A.
Scale 1 1/2" = 1'-0"

SECTION
Scale 3/4" = 1'-0"

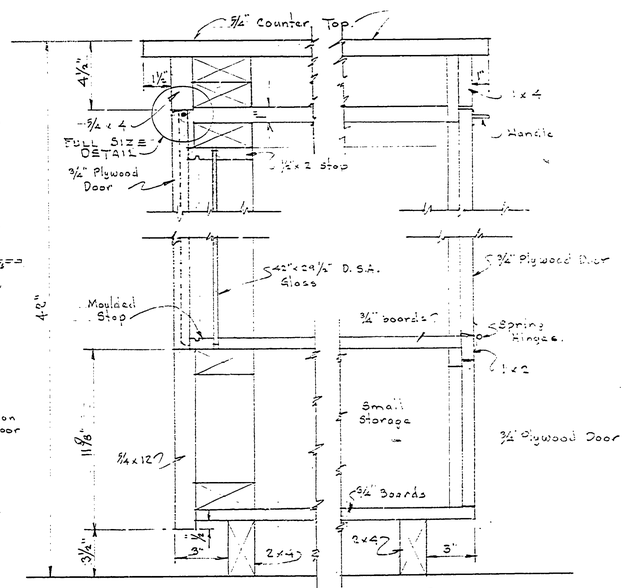

DETAIL SECTION OF CASE
Scale 3" = 1'-0"

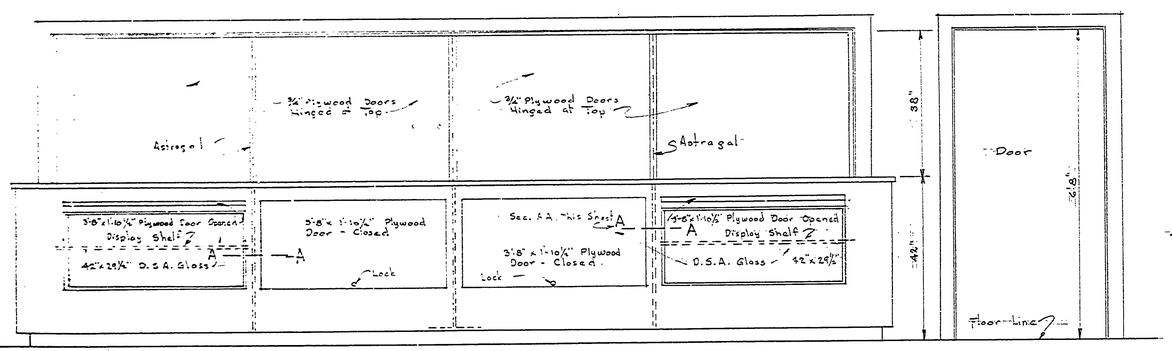

ELEVATION OF SERVING COUNTER
Scale 3/4" = 1'-0"

REVIEWED BY SECTIONS		DATE
ARCHITECTURAL	J.T.R.	7-25-49
ENGINEERING	M.C.H.	25 Jul 49
LANDSCAPE	J.T.R.	7-21-49

APPROVED BY [signature]
ASSISTANT CHIEF IN CHARGE OF DESIGN
DATE 7/27/49

NO.	DATE	BY
1		
2		
3		

REVISIONS

4		
5		
6		

DRAWN BY	J.W.F.	
TRACED BY	J.W.F.	8/1/49
CHECKED BY		
DATE		

MICHIGAN
DEPARTMENT OF CONSERVATION
PARKS AND RECREATION DIVISION

WARMING HOUSE
PORCUPINE MTS. RECREATION AREA

SHEET NO. 4 OF 6

PLAN NO. A-106