R-1638 COMMERCIAL BLUEPRINT SERVICE 500 1-74 57469

DOOR SCHEDULE

OPENING NO.	DOOR: DOOR TYPE	DOOR: SIZE	DOOR: THICKNESS	DOOR: MATERIAL	DOOR: GUAGE LABEL	FRAME: SIZE	FRAME: MATERIAL	FRAME: GUAGE LABEL	HARDWARE - SEE SPECIFICATIONS FOR OTHER HARDWARE: CLOSER	THRESHOLD			REMARKS
1	A	6'-0" × 7'-0"	1 3/4"	ALUM.		6' × 6"	ALUM.		2 REQ'D - CONCEALED	ALUM.			
2	A	6'-0" × 7'-0"	1 3/4"	ALUM.		6' × 6"	ALUM.		2 REQ'D CONCEALED	ALUM.			
3	C	2'-6" × 7'-0"	1 3/4"	H.M.	18	2'-8" × 6 3/4"	H.M.	16	1 REQ'D	ALUM.			
4	C	2'-6" × 7'-0"	1 3/4"	H.M.	18	2'-8" × 6 3/4"	H.M.	16	1 REQ'D	ALUM.			
5	B	3'-0" × 7'-0"	1 3/4"	H.M.	18	3'-0" × 6 3/4"	H.M.	16					HAS 180° SWING
6	B	3'-0" × 7'-0"	1 3/4"	H.M.	18	3'-0" × 6 3/4"	H.M.	16					
7	B	3'-0" × 7'-0"	1 3/4"	H.M.	18	3'-0" × 6 3/4"	H.M.	16					
8	B	3'-0" × 7'-0"	1 3/4"	H.M.	18	3'-0" × 6 3/4"	H.M.	16					
9	B	3'-0" × 7'-0"	1 3/4"	H.M.	18	3'-0" × 6 3/4"	H.M.	16	1 REQ'D	ALUM.			
10	B	3'-0" × 7'-0"	1 3/4"	H.M.	18	3'-0" × 6 3/4"	H.M.	16	1 REQ'D	ALUM.			NO HOWE REQ'D ON EXTERIOR

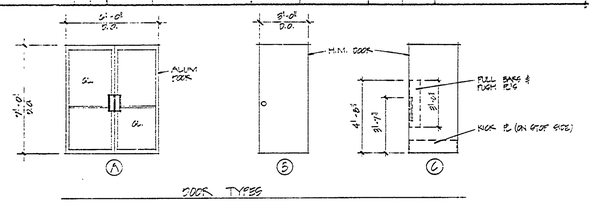

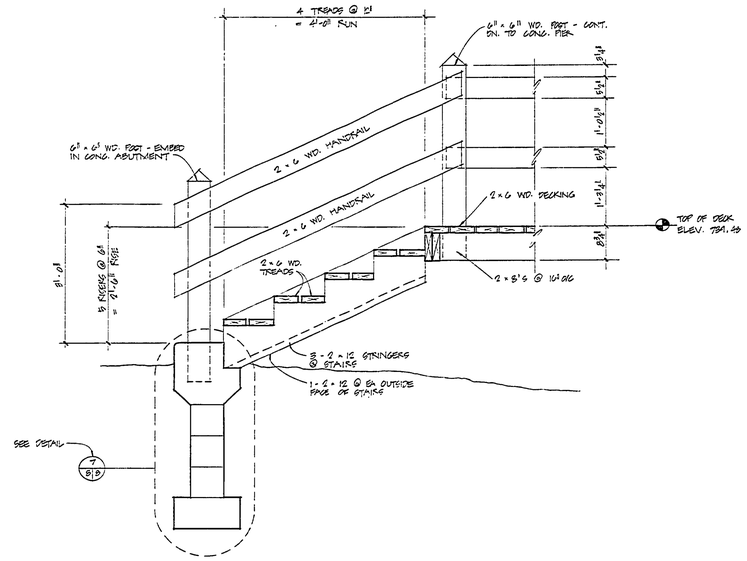

SECTION (AT WOOD DECK NO. 4) 15/4.5

SCALE - 3/4" : ONE FOOT

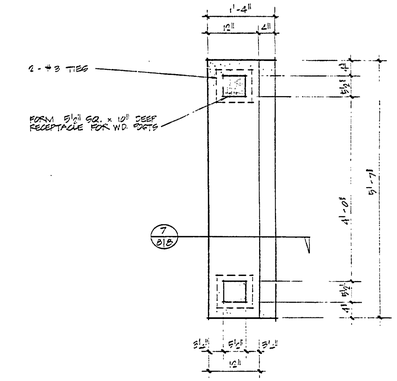

PLAN VIEW STAIR ABUTMENT (AT WOOD DECK NO. 3 & 4)

SCALE - 3/4" : ONE FOOT

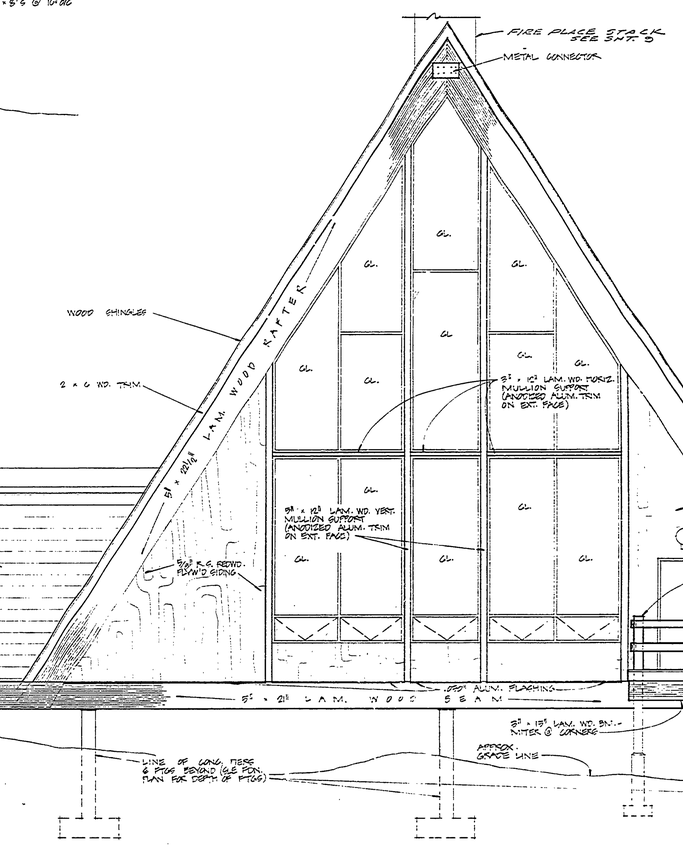

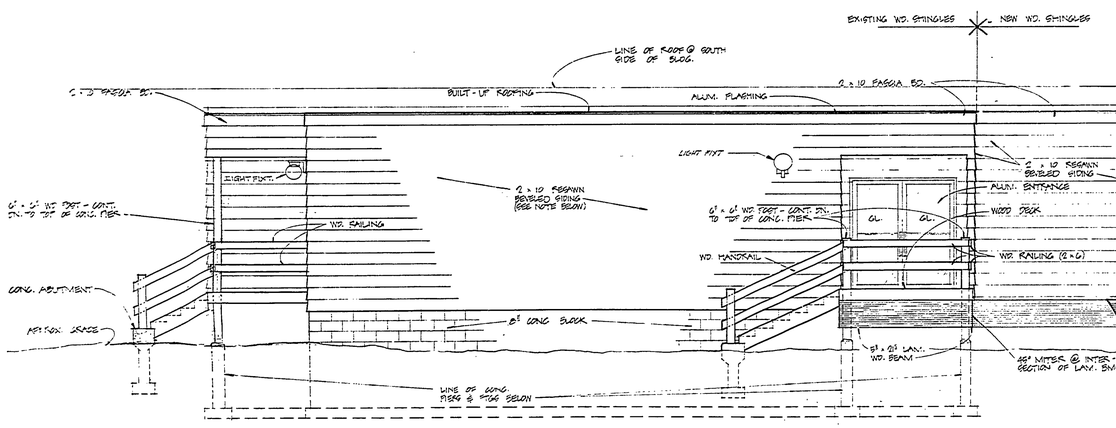

NORTH ELEVATION

SCALE - 1/4" : ONE FOOT

NOTE
- MECHANICAL EQUIPMENT LOCATED ON ROOF NOT SHOWN ON THIS ELEVATION. (SEE MECHANICAL PLAN)
- BEVELED WD. SIDING SHALL BE WHITE PINE - PROVIDED BY D.N.R. PARKS DIVISION & INSTALLED BY GEN. CONTR.

SURVEYED BY		DRAWN BY	5/75	NO.	DATE	BY	REVISIONS	NO.	DATE	BY	REVISIONS		
DESIGNED BY G.R.C. & J.A.C.	4/75	CHECKED BY		1.	5/20	DDP	REVISE SIZE OF CONCESSION OFFICE DECK TO COMPLY WITH EXIST. CONST.	3.					
	DATE		DATE	2.				4.					

MICHIGAN DEPARTMENT OF NATURAL RESOURCES

ELEVATION, DOOR SCHEDULE — SHEET TITLE

PORCUPINE MOUNTAINS STATE PARK — AREA OR PARK

SKI CHALET ADDITION — PROJECT

PROJECT NO. 24.1454

SHEET 5 OF 15

PLAN NO. A-118