R-1638 COMMERCIAL BLUEPRINT SERVICE 500 1-74 57469+

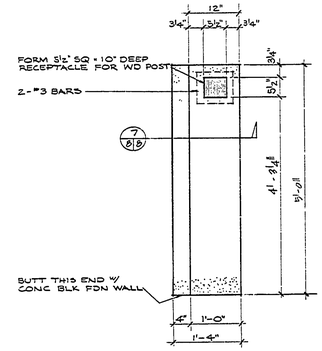

PLAN VIEW @ STAIR ABUTMENT
(AT WOOD DECK NO. 2)
SCALE — 3/4" = ONE FOOT

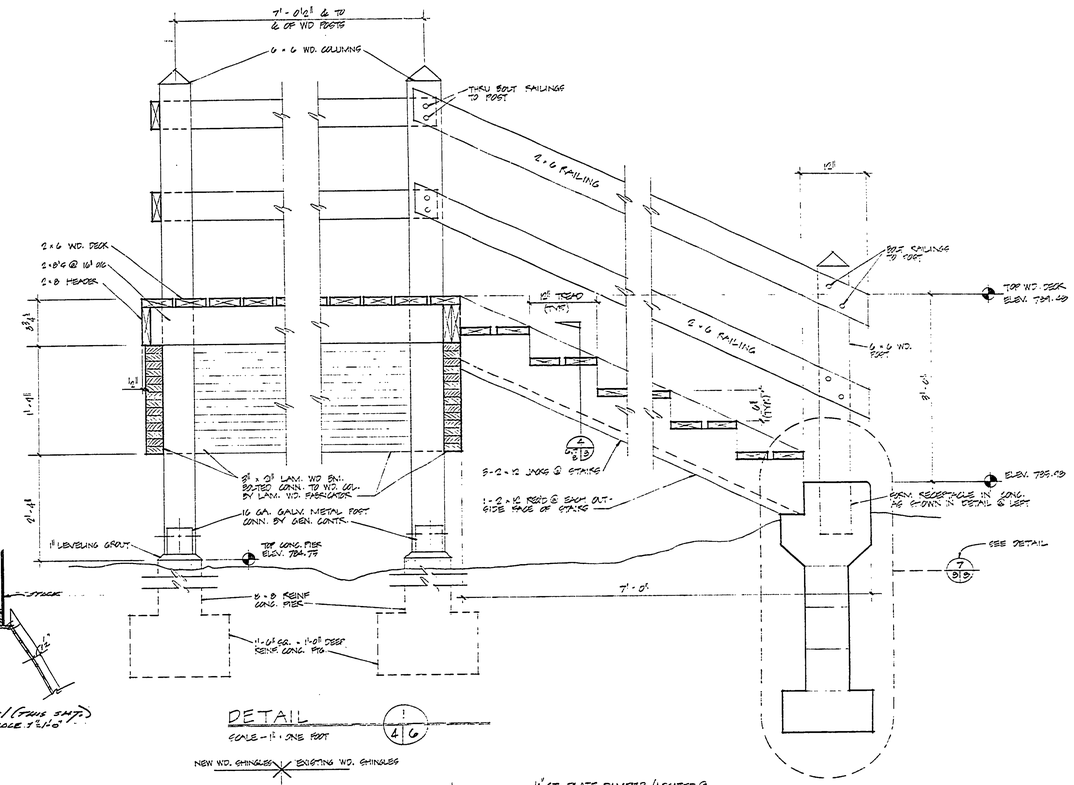

SECT. 1-1 (THIS SHT.)
SCALE 1"=1'-0"

DETAIL
SCALE — 1" = ONE FOOT
4 G

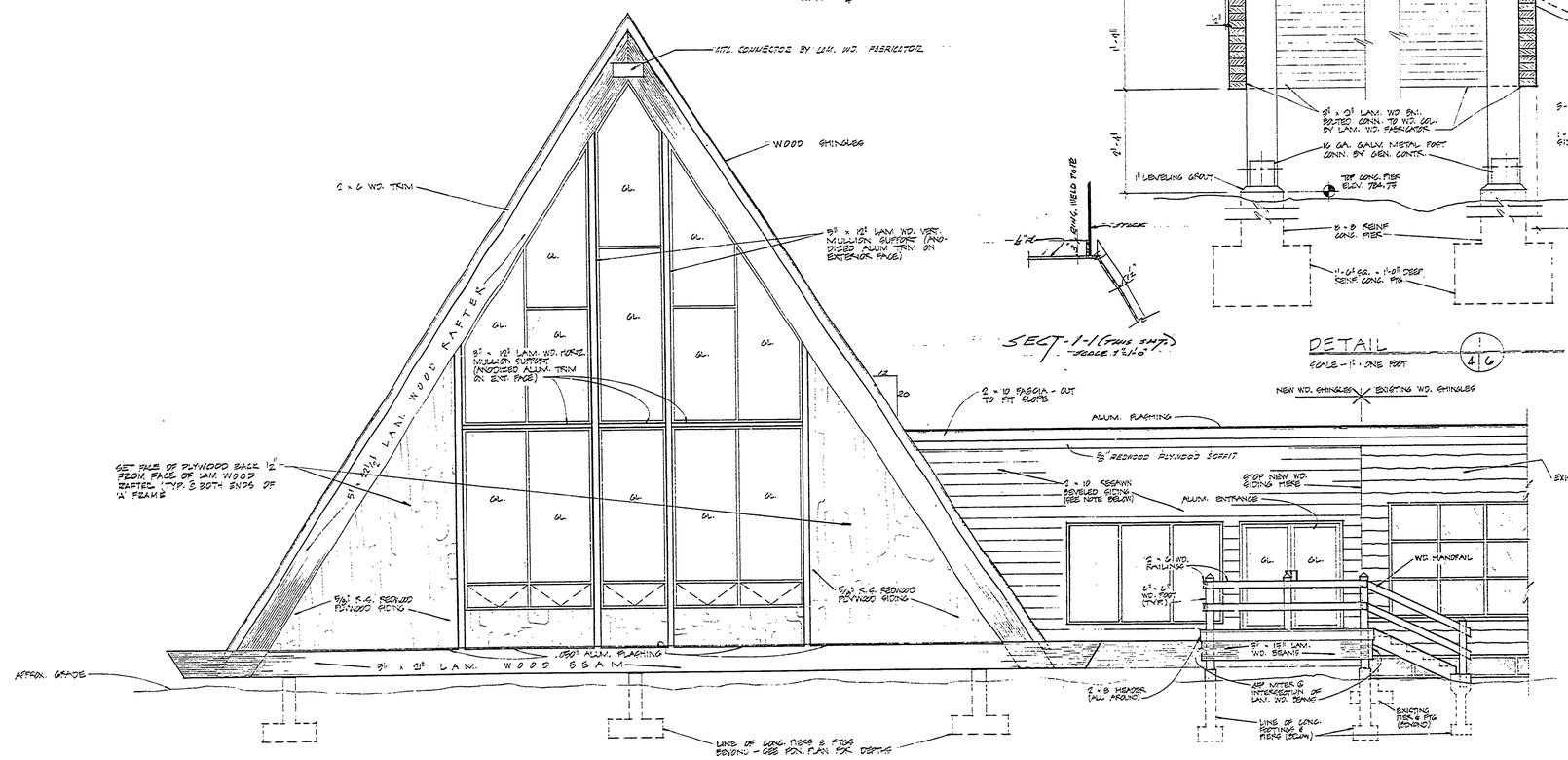

SOUTH ELEVATION
SCALE — 1/4" = ONE FOOT

NOTE—
REVERSED WD. SIDING SHALL BE WHITE PINE - PROVIDED BY D.N.R. PARKS DIVISION & INSTALLED BY GEN. CONTR.

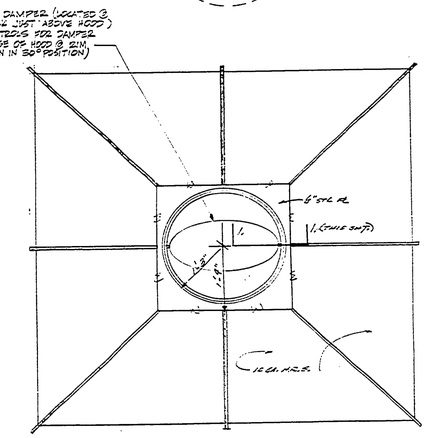

HOOD - SECT 6-6 (SHT. - 2)

SURVEYED BY		DRAWN BY	5/75	NO.	DATE	BY	REVISIONS	NO.	DATE	BY	REVISIONS	MICHIGAN DEPARTMENT OF NATURAL RESOURCES	ELEVATION & DETAILS
DESIGNED BY GRC. & JSC.	4/75	CHECKED BY		1.				3.					SHEET TITLE
	DATE		DATE	2.				4.					

AREA OR PARK: PORCUPINE MOUNTAINS STATE PARK
PROJECT: SKI CHALET ADDITION
PROJECT NO. 24-1454
SHEET 6 OF 15
PLAN NO. A-118