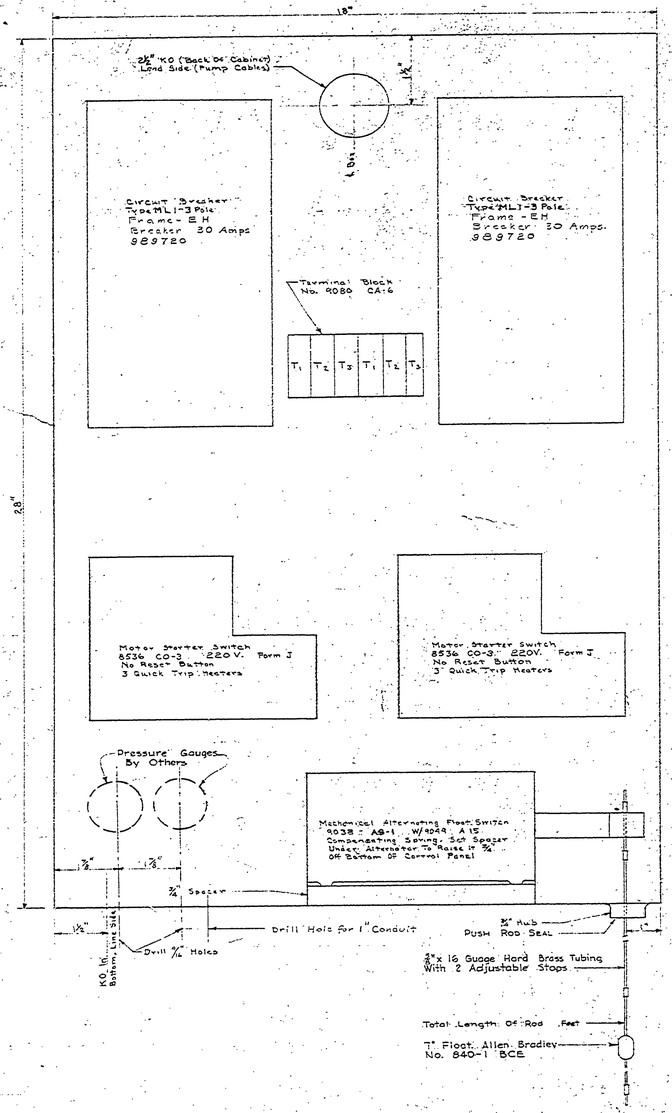

FRONT WITH COVER REMOVED
Half Scale

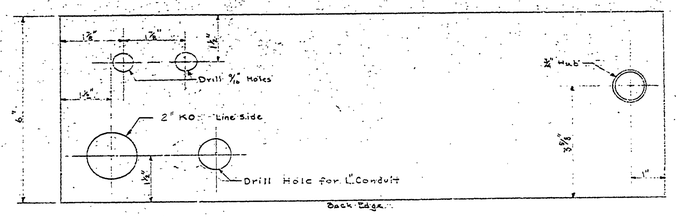

BOTTOM
Half Scale

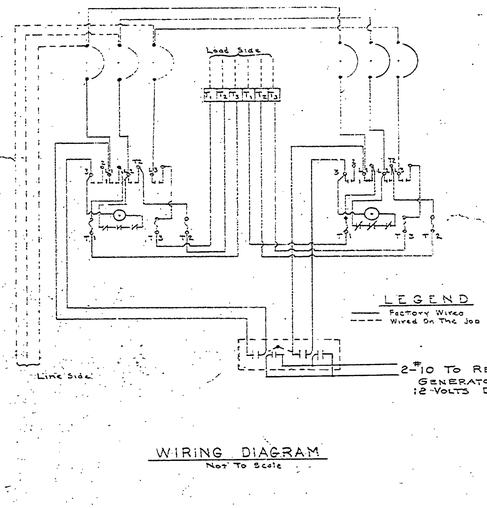

WIRING DIAGRAM
Not To Scale

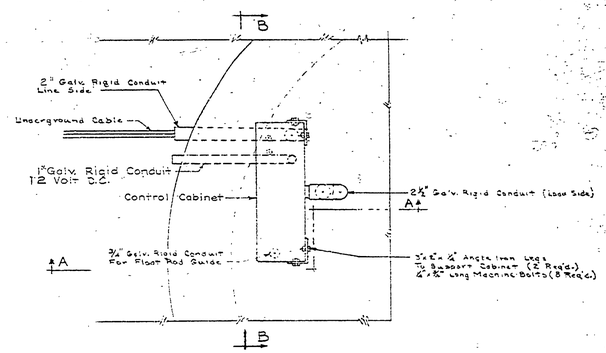

PLAN

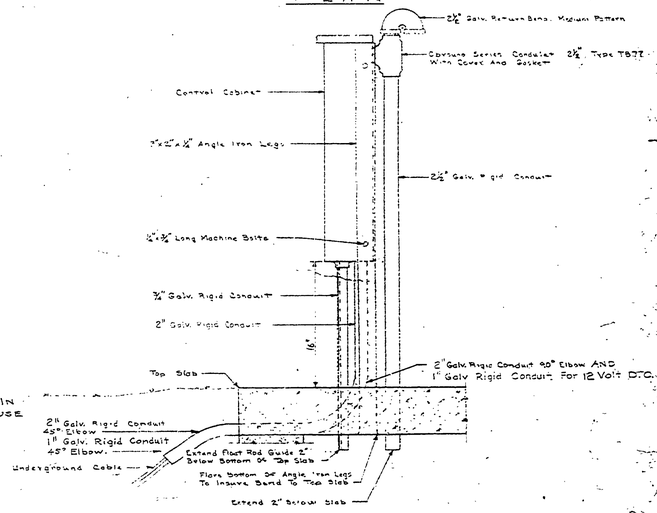

SECTION A-A

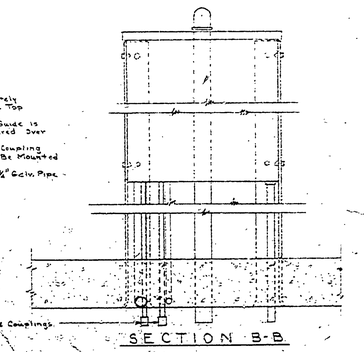

SECTION B-B

NOTES

All Numbers Shown On Component Parts In Control Cabinet Are Square D. No Substitutes Will Be Accepted.
Component Parts In This Control Box Are To Be Of Sufficient Amperage To Handle Pump Motors Furnished.
Cabinet Is To Be Weatherproof (See Specifications For Complete Description)

NOTES

Control Pedestal Should Be Completely Assembled And Set In Form Before Top Slab Is Poured.
Be Sure ¾" Conduit For Float Rod Guide Is Plumb & Straight & Exactly Centered Over 8" Float Guide.
Connect ¼" Copper Tube To ¼" Galv. Coupling Pressure Gauges With ¾" Face To Be Mounted In Control Cabinet (By Owner)
Place ¼" Galv. Couplings On Top Of ¼" Galv. Pipe Inside Control Panel.

CONTROL FOR DUAL PUMPS

PANEL PEDESTAL INSTALLATION DETAILS
Scale 1½" = 1'-0"

NO.	DATE	BY	REVISIONS
1			4
2			5
3			6

APPROVED — CHIEF OF DIVISION — CHIEF OF PARKS AND RECREATION DIVISION

REVIEWED — ARCHITECTURAL — ENGINEERING — LANDSCAPE

DESIGNED BY — DRAWN BY — CHECKED BY

440 VOLT 3° PUMP CONTROL PANEL

MICHIGAN
DEPARTMENT OF CONSERVATION
PARKS AND RECREATION DIVISION

PORCUPINE MOUNTAINS STATE PARK
PRESQUE ISLE SECTION
CENTRAL SEWAGE DISPOSAL SYSTEM

SHEET NO. 4 OF 8

PLAN NO. E-117

PP56-999-976-002-01 SHEET 10 OF 18