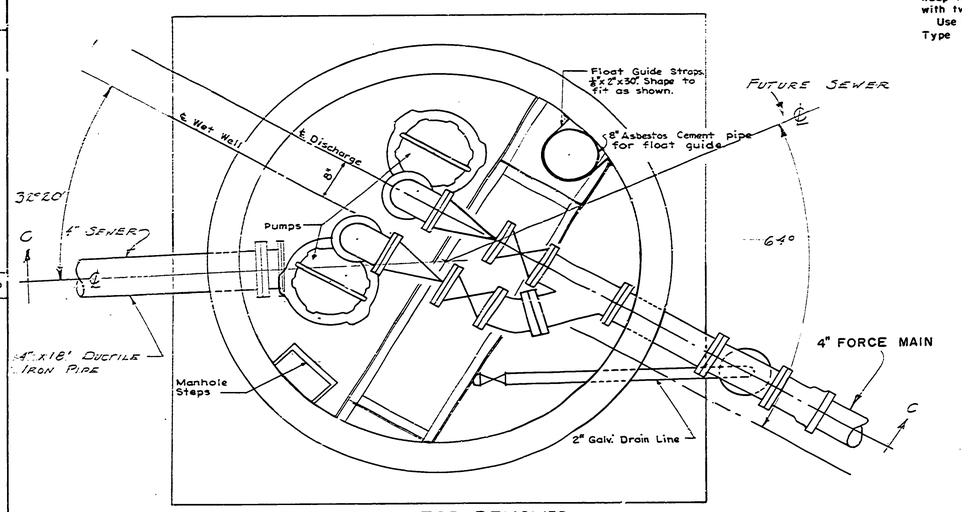

PLAN WITH TOP REMOVED

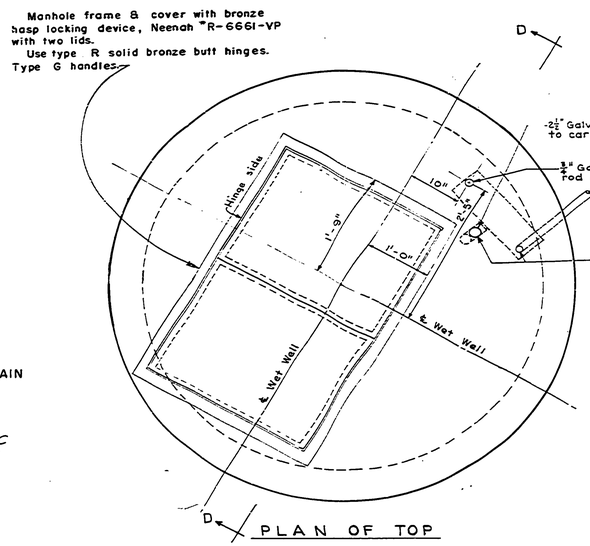

PLAN OF TOP

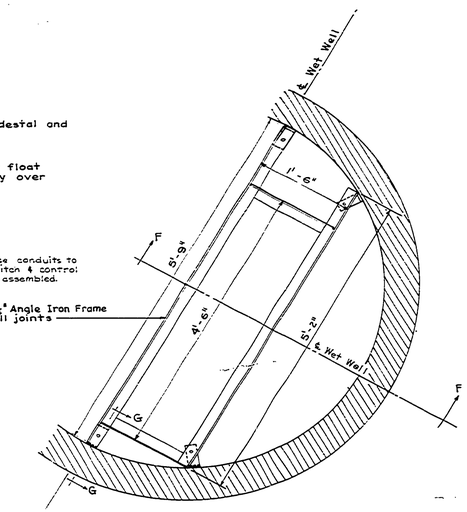

PLAN

NOTE: All pipe (unless otherwise noted) inside wet well is 4" cast iron with flanged joints.

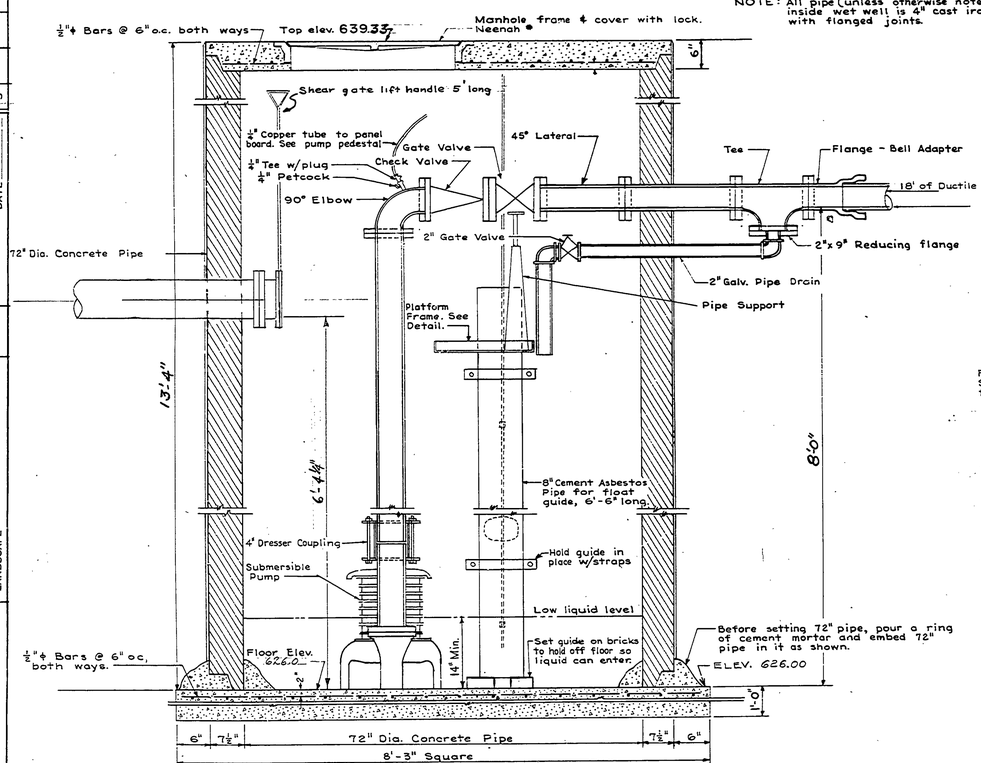

SECTION C-C WITH DRAIN IN SECTION

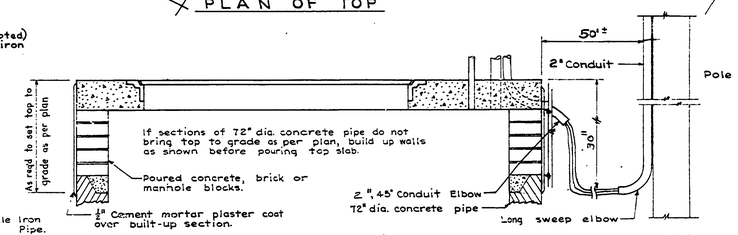

SECTION D-D

NOTE: Floor of platform is to be floor grating

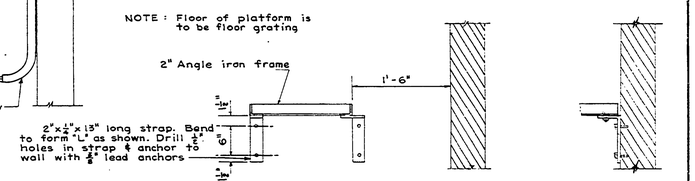

PLATFORM DETAILS

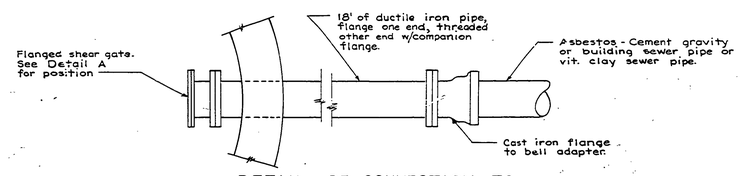

DETAIL OF CONNECTION TO ASBESTOS-CEMENT SEWER PIPE

(Not to scale)

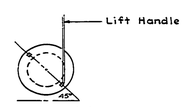

DETAIL 'A' FOR SHEAR GATE

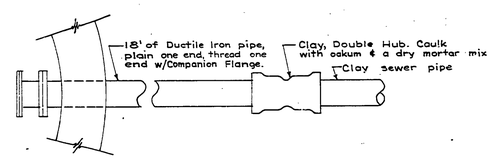

DETAIL OF CONNECTION TO CLAY SEWER PIPE

REVISIONS			
NO.	DATE	BY	
4			
5			
6			

APPROVED BY	DATE

REVIEWED BY SECTIONS	DATE
ARCHITECTURAL	
ENGINEERING	
LANDSCAPE	

NO.	DATE	BY
1		
2		
3		

DRAWN BY
TRACED BY MILLER 5-67
CHECKED BY
DATE

WET WELL AND PUMP STATION

MICHIGAN
DEPARTMENT OF CONSERVATION

MUSKALLONGE LAKE
STATE PARK

SHEET NO. 4 OF 5

PLAN NO. E-104

PA-10B-5124-300-019-C5 PA-999-9972-976-019-C5