R-1631 COMMERCIAL BLUEPRINT SERVICE 500 6-72 51714+

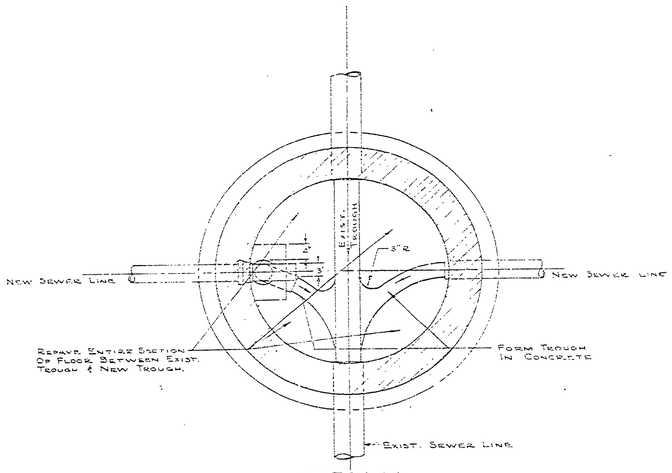

SECTION A-A

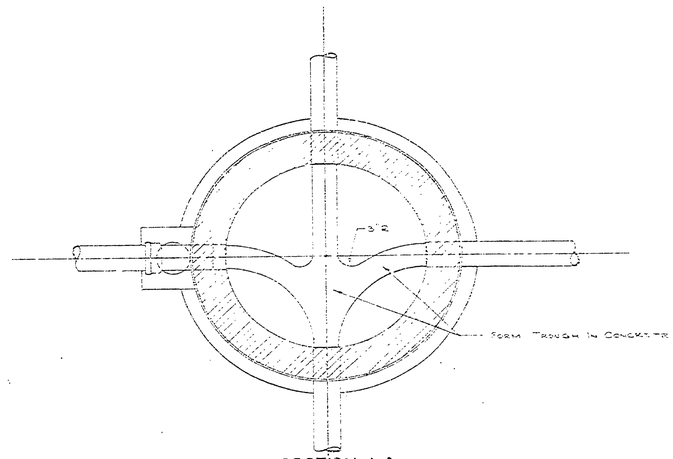

SECTION A-A

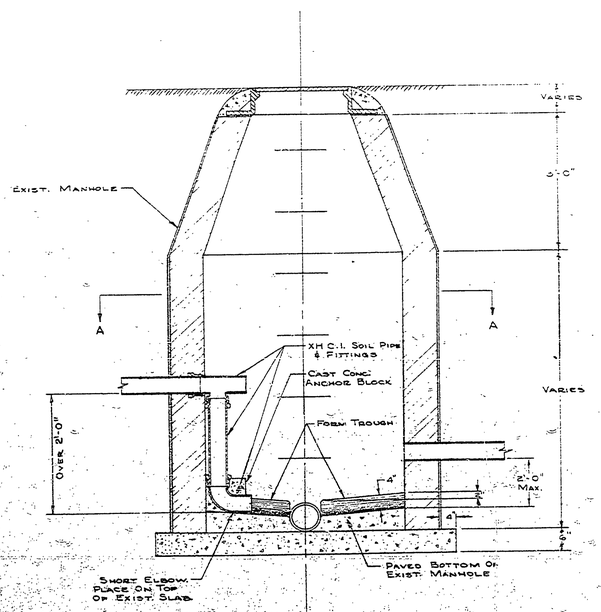

STANDARD CONNECTION AT EXISTING MANHOLE

Scale $\frac{3}{4}$" = 1'-0"

Min. Wall Thickness

Vt. H. Depth	Brick	Conc. Block	Precast Conc.
0'-10'	8"	6"	6"
10'-15'	12"	8"	8"
15'-25'	16"	12"	12"

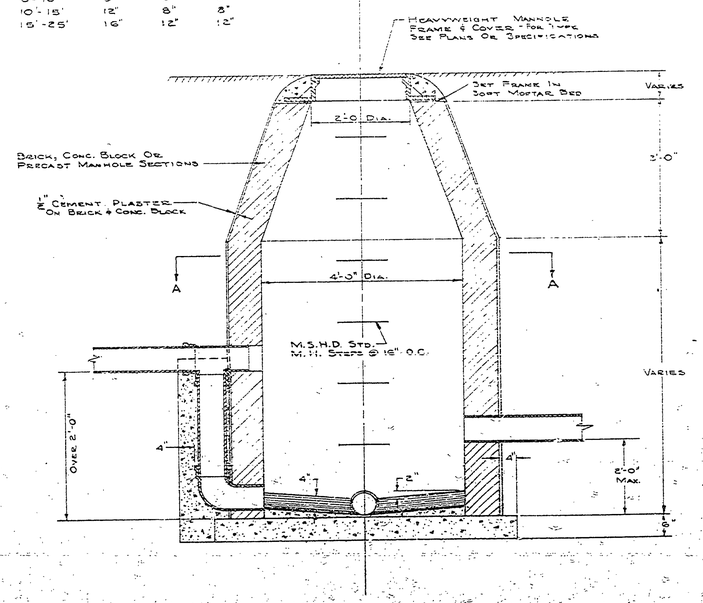

STANDARD MANHOLE (NEW CONSTRUCTION)

Scale $\frac{3}{4}$" = 1'-0"

SURVEYED BY		DRAWN BY	NO.	DATE	BY	REVISIONS	NO.	DATE	BY	REVISIONS	MICHIGAN DEPARTMENT OF NATURAL RESOURCES	STANDARD MANHOLE	MUSKALONGE LAKE STATE PARK	PROJECT NO. 24-IN-73	
DESIGNED BY		CHECKED BY	1.				3.					SHEET TITLE	AREA OR PARK	SHEET 5 OF 5	PLAN NO. E-106
	DATE		2.				4.						CAMPGROUND DEVELOPMENT PROJECT		