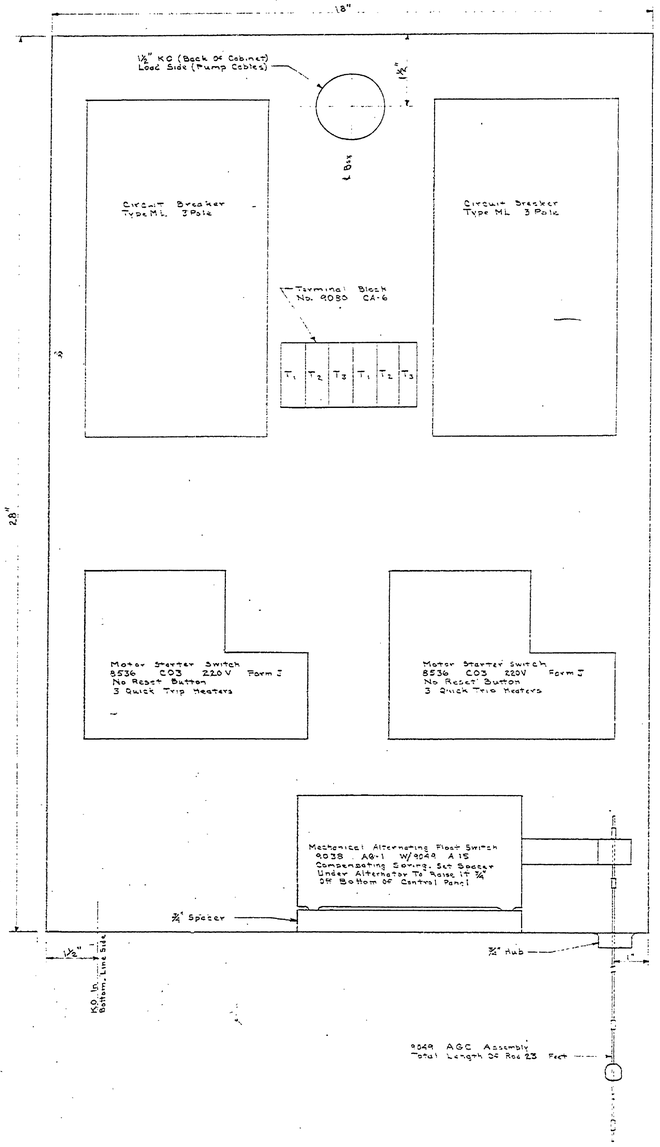

FRONT WITH COVER REMOVED
Half Scale

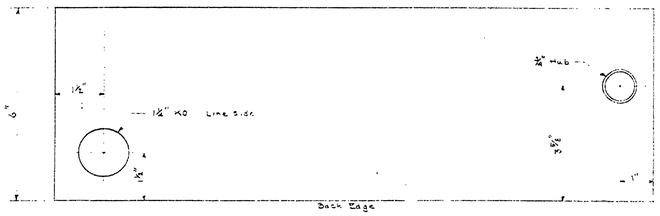

BOTTOM
Half Scale

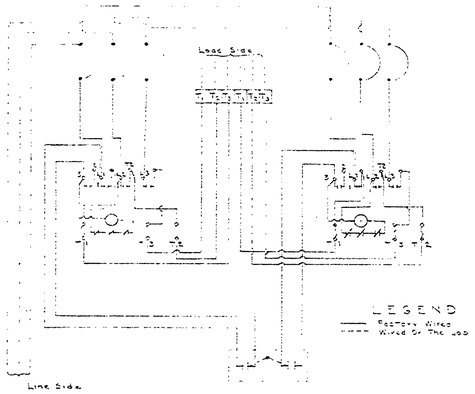

WIRING DIAGRAM
Not To Scale

NOTES

All Numbers Shown On Component Parts In Control Cabinet Are Square D. No Substitutes Will Be Accepted.
Component Parts In This Control Box Are To Be Of Sufficient Amperage To Handle Pump Motors Furnished.
Cabinet Is To Be Weatherproof (See Specifications For Complete Description)

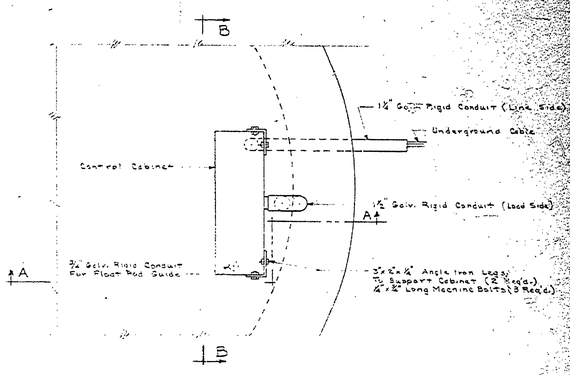

PLAN

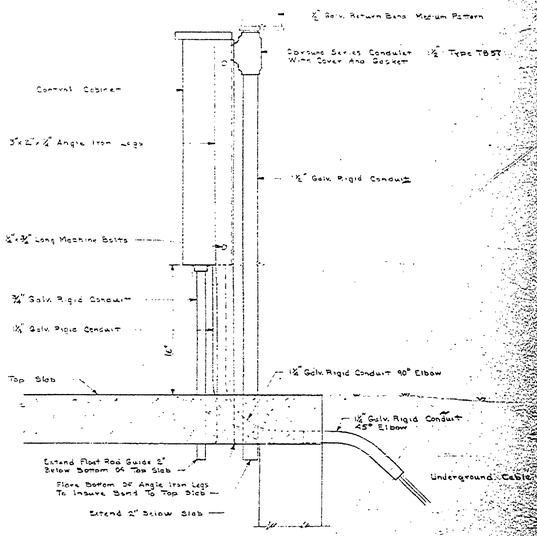

SECTION A-A

NOTES

Control Pedestal Should Be Completely Assembled And Set In Form Before Top Slab Is Poured.
Be Sure 1½" Conduit For Float Rod Guide Is Plumb & Straight & Exactly Centered Over 3" Float Guide.

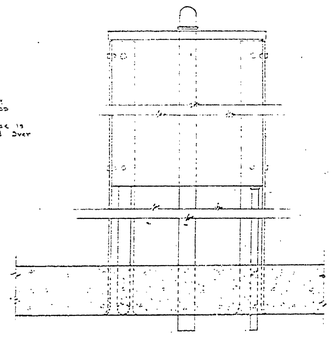

SECTION B-B

PANEL PEDESTAL INSTALLATION DETAILS
Scale ½" = 1'-0"

CONTROL FOR DUAL PUMPS

| | | |