COMMERCIAL BLUEPRINT SERVICE, LANSING

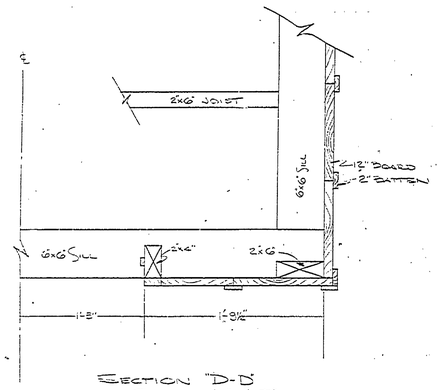

SECTION "D-D"
SCALE 1½" = 1'-0"

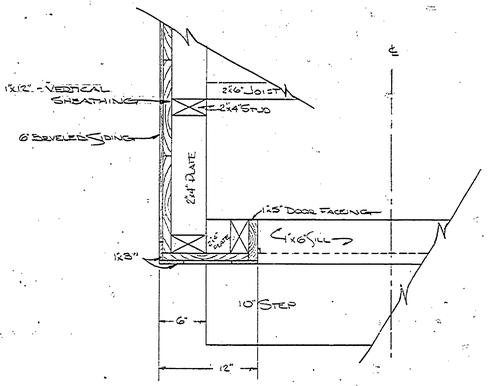

SECTION "F-F"
SCALE 1½" = 1'-0"

NOTE:
- THIS ADDITION HAS NO STUDS OR RAFTERS. CONSTRUCTION IS OF 12" BOARDS WITH 2" BATTENS. FRAMING IS OF 2x6's EXCEPT FOR DOOR FRAME.

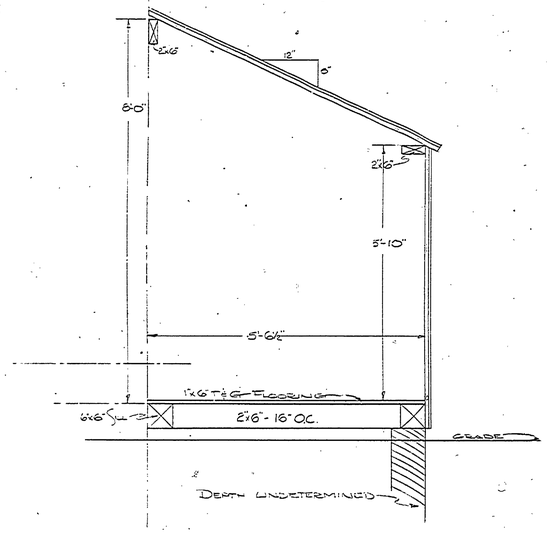

SECTION "C-C"
SCALE 3/4" = 1'-0"

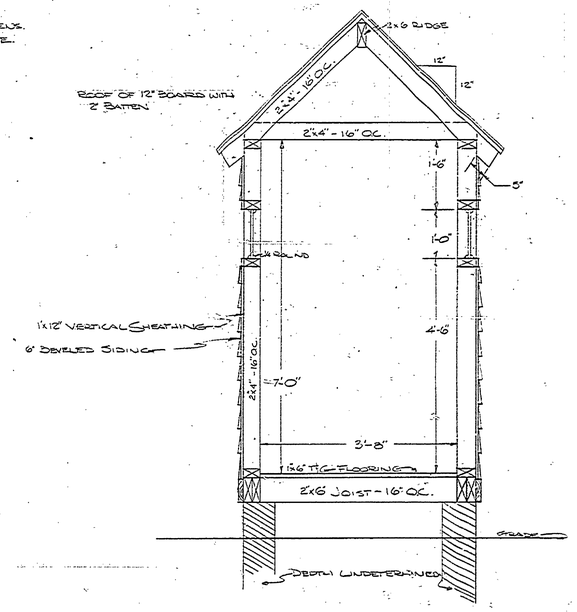

SECTION "E-E"
SCALE 3/4" = 1'-0"

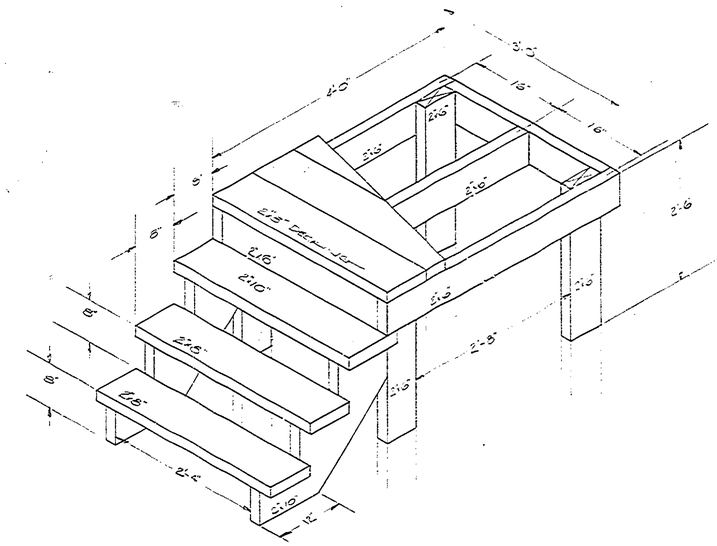

DETAIL OF SIDE PORCH
SCALE 1" = 1'-0"

SPECIAL NOTE:
THESE DRAWINGS ARE FOR REMODELING PURPOSES ONLY.
FOR ANY INFORMATION ON EXISTING STRUCTURE - SEE MEASURED DRAWINGS

BUILDING #3

REVISIONS						
NO.	DATE	BY	NO.	DATE	BY	
1			4			
2			5			
3			6			

APPROVED — DATE
CHIEF OF DIVISION
ASST. CHIEF OF DIVISION
CHIEF OF PLANNING AND CONSTRUCTION

REVIEWED — DATE
ARCHITECTURAL
ENGINEERING
LANDSCAPE

DESIGNED BY — DATE 5/26/61
DRAWN BY — 6/2/61
CHECKED BY

MICHIGAN
DEPARTMENT OF CONSERVATION
PARKS AND RECREATION DIVISION

RESTORATION DRAWINGS
FAYETTE HISTORICAL TOWNSITE
FAYETTE STATE PARK

SHEET NO. 8 OF 9

PLAN NO. A-92