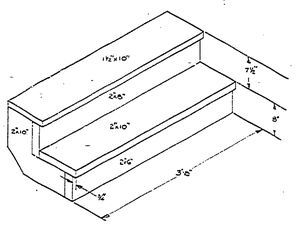

STEP DETAIL
SCALE 3/4"=1'-0"

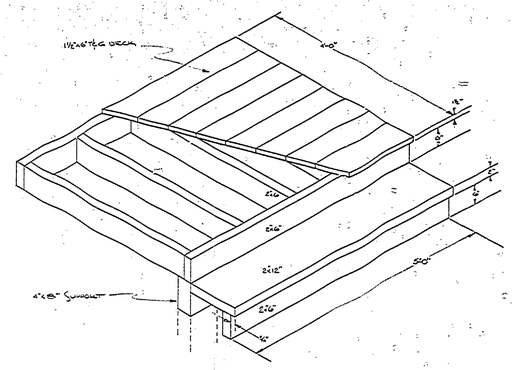

PICTORIAL DETAIL OF PORCH - W/ STEP
(IDENTICAL TO OTHER PORCH WITH EXCEPTION OF STEP)
SCALE 3/4"=1'-0"

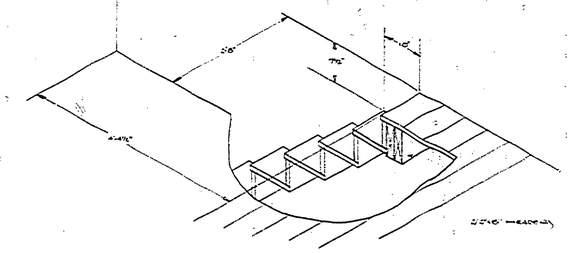

DETAIL VIEW OF MAIN STAIRWELL
SCALE 3/4"=1'-0"

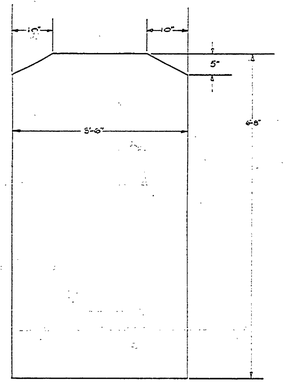

DETAIL OF ARCH BETWEEN KITCHEN AND LIVING ROOM
SCALE 3/4"=1'-0"

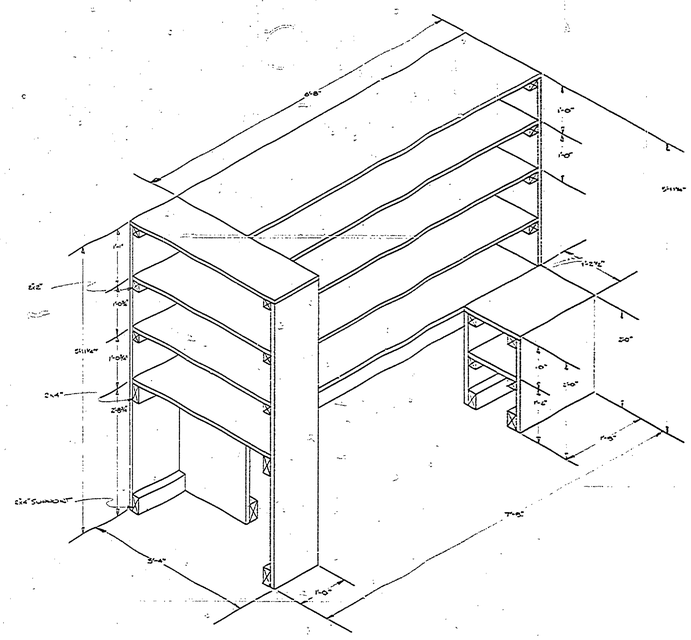

STORAGE ROOM SHELF DETAIL
ADJACENT TO KITCHEN
SCALE 3/4"=1'-0"

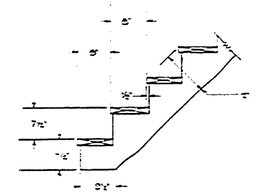

BASEMENT STAIR DETAIL
(STEEL)
SCALE 3/4"=1'-0"

BUILDING # 13

MEASURED DRAWINGS
FAYETTE HISTORICAL TOWNSITE
FAYETTE STATE PARK

MICHIGAN
DEPARTMENT OF CONSERVATION
PARKS AND RECREATION DIVISION

SHEET NO. 2 OF 3

PLAN NO. A-13

DATE	REVIEWED	DATE	APPROVED
DESIGNED BY	ARCHITECTURAL		CHIEF OF DIVISION
DRAWN BY	ENGINEERING		STATE CHIEF OF DIVISION
CHECKED BY	LANDSCAPE		CHIEF OF PLANNING FOR CONSTRUCTION

DATE	NO.	BY	DATE	NO.	BY
	1			4	
	2			5	
	3			6	

REVISIONS

COMMERCIAL BLUEPRINT SERVICE, LANSING