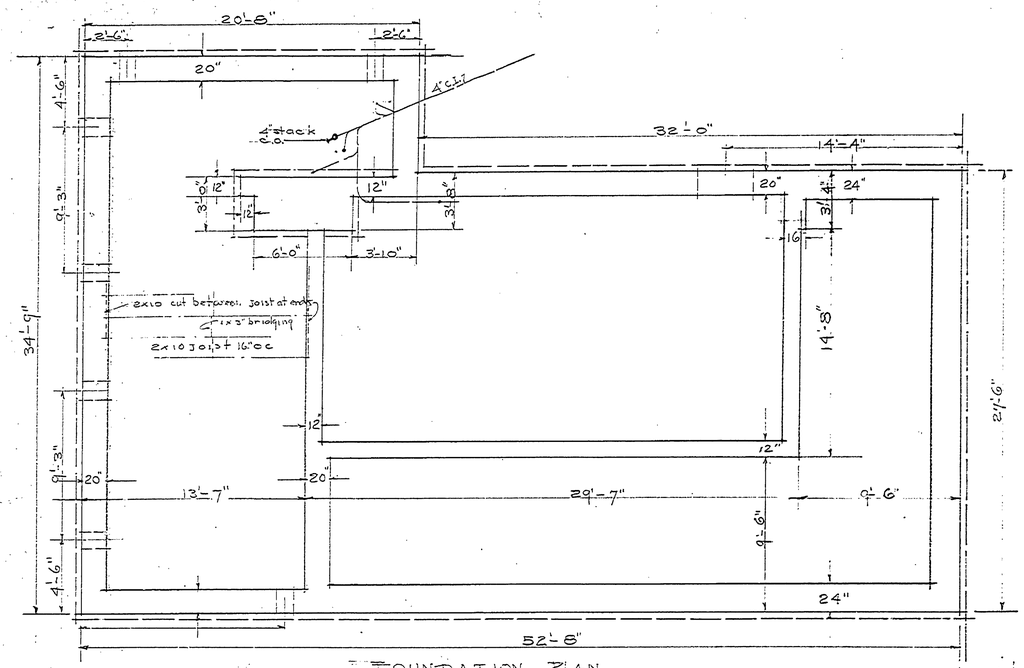

FOUNDATION PLAN
SCALE 1/4"=1'-0"

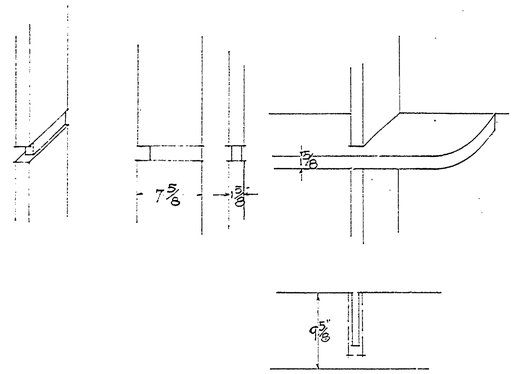

DETAILS OF SHELVING
SCALE 1½"=1'-0"

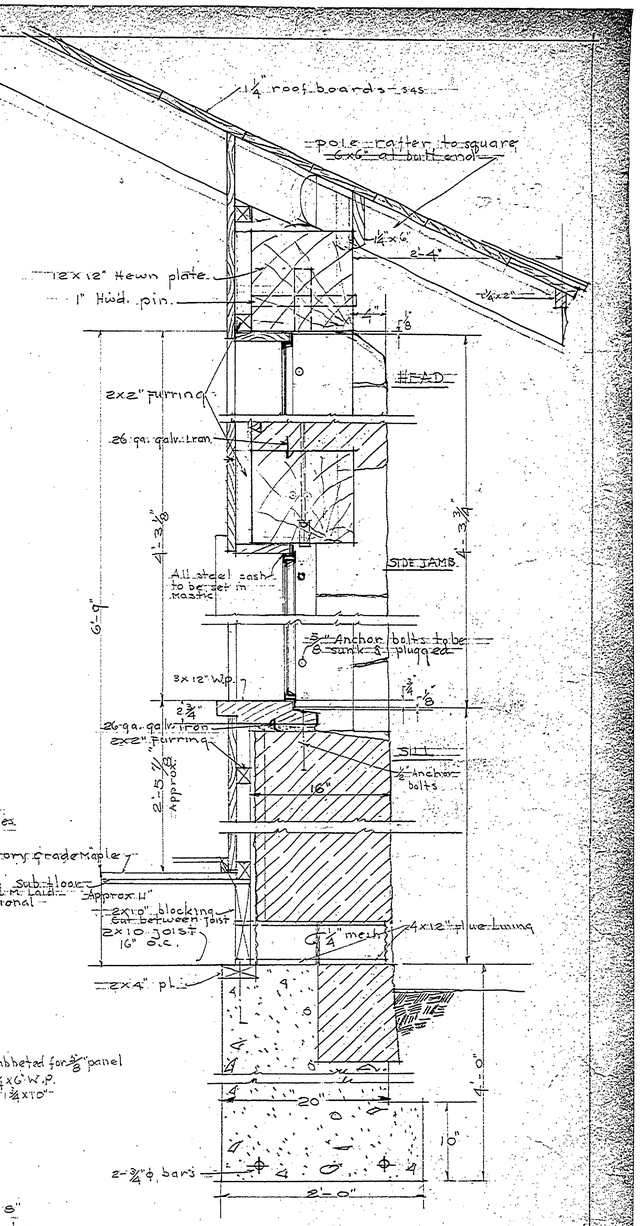

WALL SECTION DD
SCALE 1½"=1'-0"

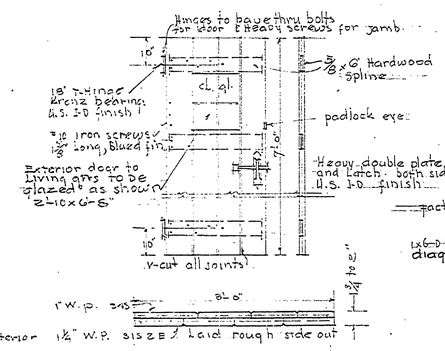

EXTERIOR DOOR DETAILS Req.
SCALE 1"=1'-0"
Rear door to store Not to be glazed.

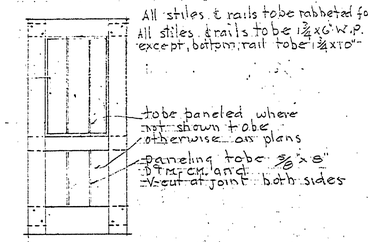

Interior doors to be paneled

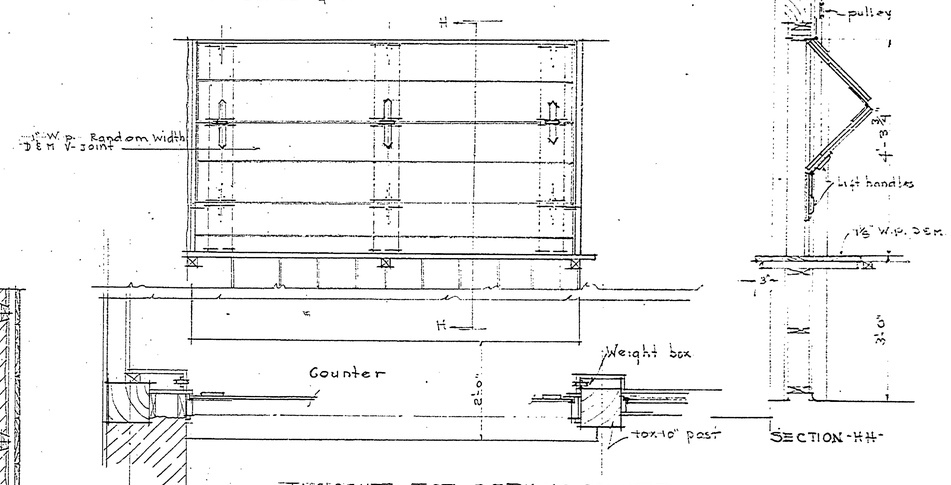

ENCLOSURE FOR SERVING COUNTER
SCALE 3/4"=1'-0"

SECTION HH

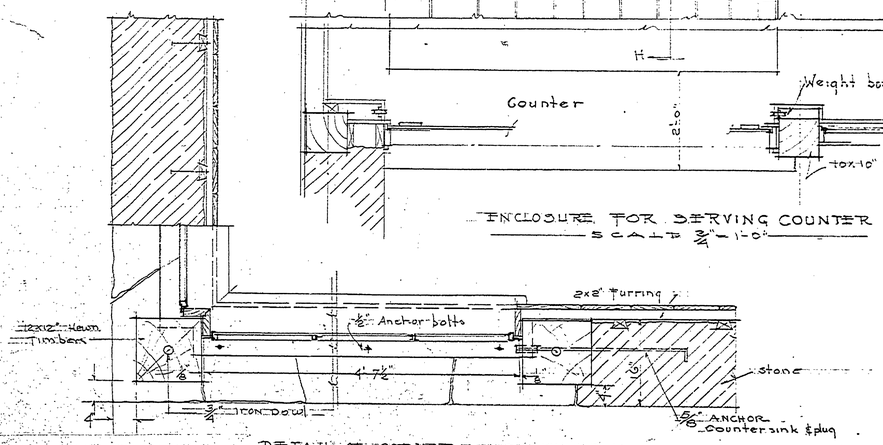

DETAIL OF CORNER WINDOW
SCALE 1"=1'-0"

MICHIGAN
DEPARTMENT OF CONSERVATION
PARKS DIVISION

Designed by Ernest Harwell	CARETAKERS QTRS. AND PARK COMMISSARY FOR FORT WILKINS S.P.	Plan 33-014
Drawn by G.F.H.		Scale as shown
Checked by		Drawing Number
		Date 2/17/39
Prepared & Approved by STATE PARKS AUTHORITY		
INSPECTOR		

INSURANCE No. 2

A-103