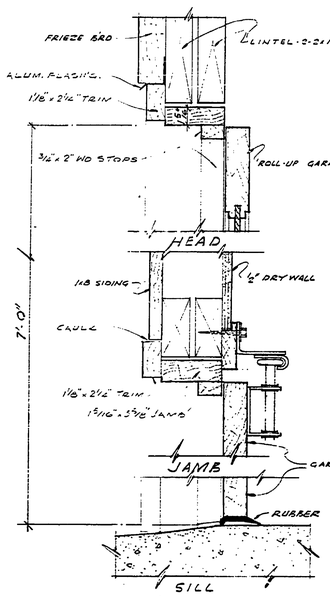

DETAIL
GARAGE DOOR

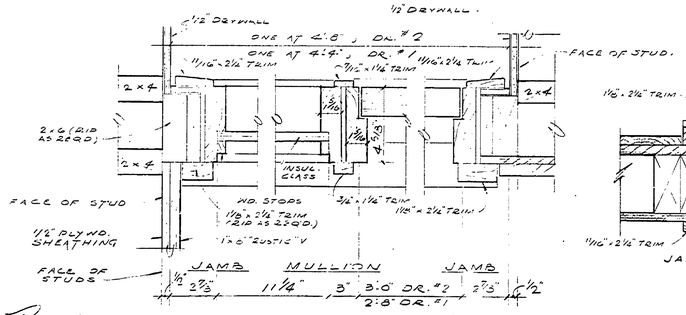

PLAN SECTION
EXTERIOR DOOR & SIDELIGHT

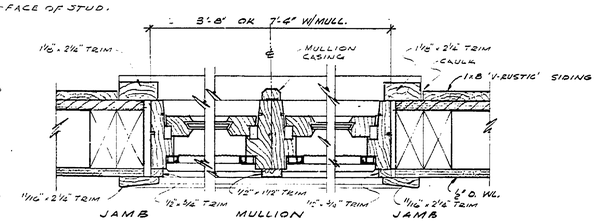

PLAN SECTION
(WITH OR WITHOUT MULLION)
TYPICAL WINDOW

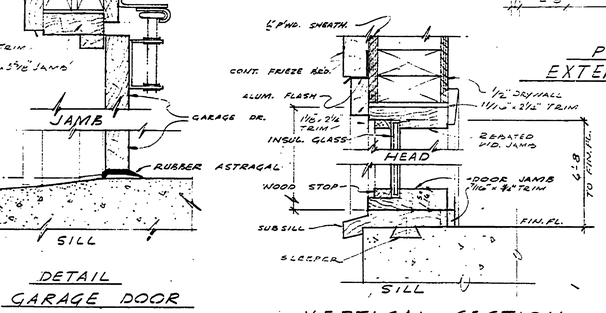

VERTICAL SECTION
ENTRANCE SIDELIGHT

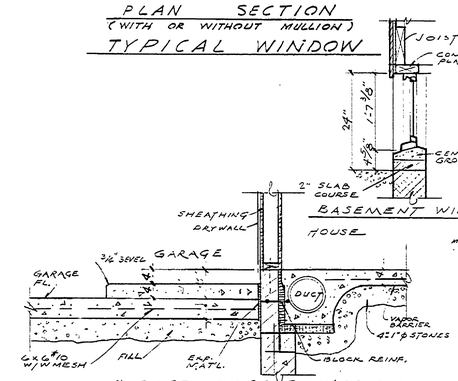

GARAGE HOUSE CONNECTION
3/16"=1'-0"

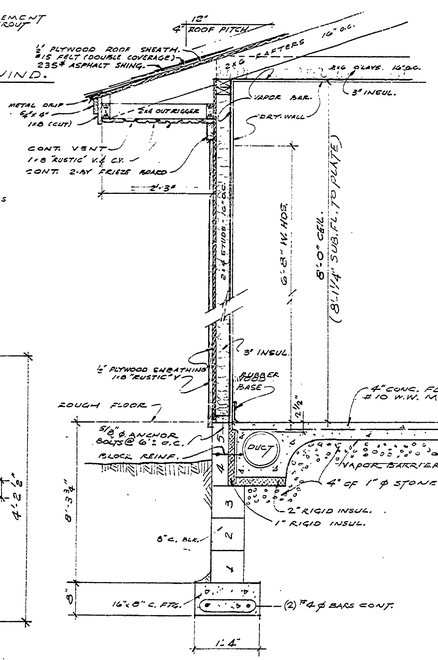

TYPICAL WALL SECTION
SCALE: 3/4" = 1'-0"

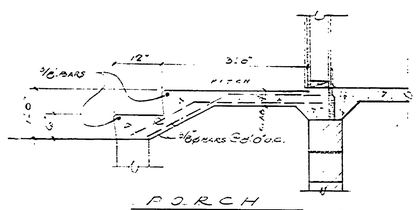

PORCH
FRONT & BACK 3/16"=1'-0"

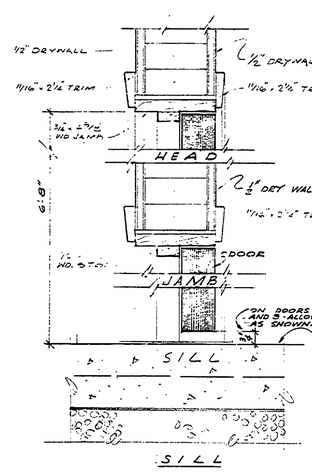

DETAIL
TYPICAL INT. DOOR

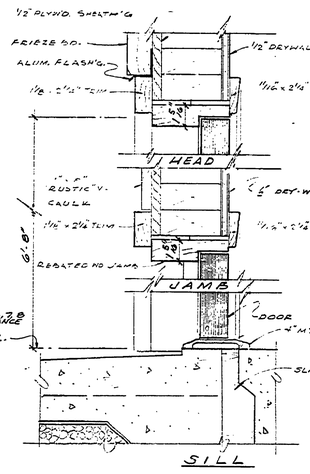

DETAIL
TYPICAL EXT. DOOR

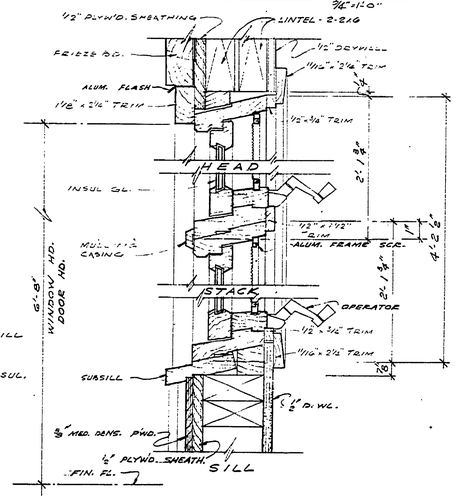

DETAIL
TYPICAL WINDOW
(ELEVATION SECT.)

DESIGNED BY	W.P.	W.N.G.	
DRAWN BY		10-4-4	
CHECKED BY	W.N.G.	5-31-5	

DATE	REVIEWED	DATE	APPROVED	DATE
	ARCHITECTURAL		CHIEF OF DIVISION	
	ENGINEERING		CHIEF OF DESIGN	
	LANDSCAPE		CHIEF OF PLANNING AND SPECIFICATION	

REVISIONS

DATE	NO.	DATE	BY	DATE	BY
	1				
	2				
	3				
	4				
	5				
	6				

SLEEPER STATE PARK
RESIDENCE

MICHIGAN
DEPARTMENT OF CONSERVATION
PARKS AND RECREATION DIVISION

BUILDING SECTION
& DETAILS
PA 108 - 5124 - 300 - 067

SHEET NO. 3 OF 5

PLAN NO. A 112

6 of 5