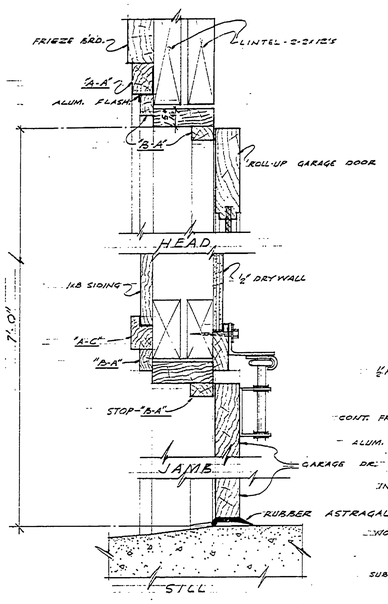

DETAIL
GARAGE DOOR

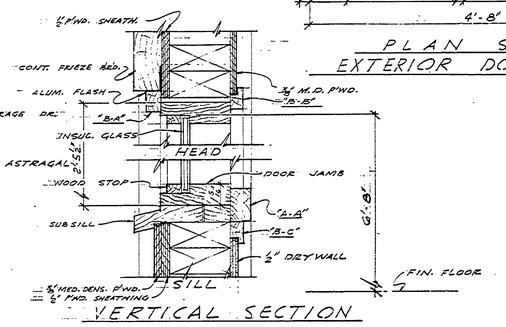

VERTICAL SECTION
ENTRANCE SIDELIGHT

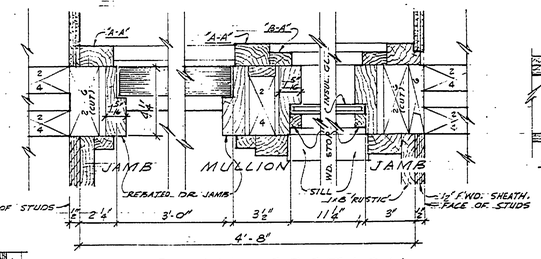

PLAN SECTION
EXTERIOR DOOR & SIDELIGHT

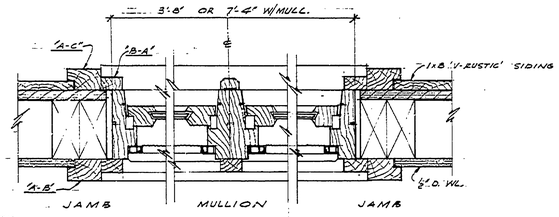

PLAN SECTION
(WITH OR WITHOUT MULLION)
TYPICAL WINDOW

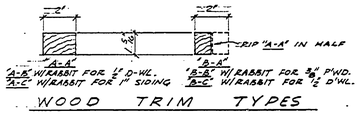

WOOD TRIM TYPES

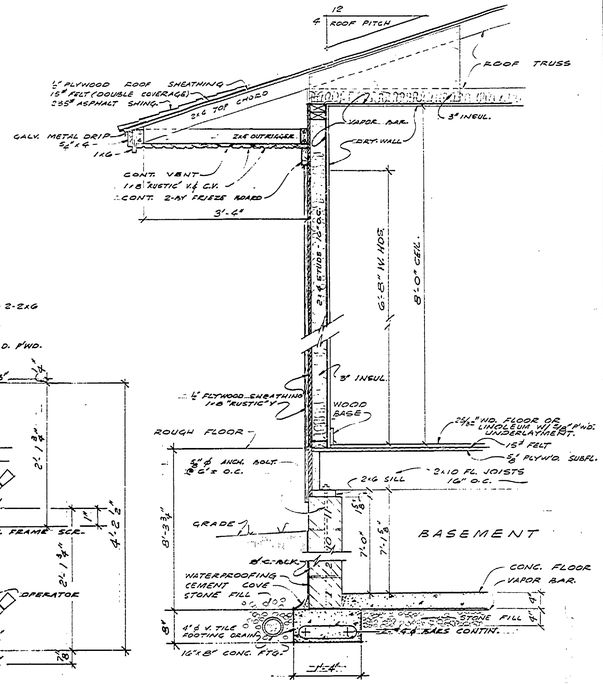

TYPICAL WALL SECTION
SCALE: ¾"=1'-0"

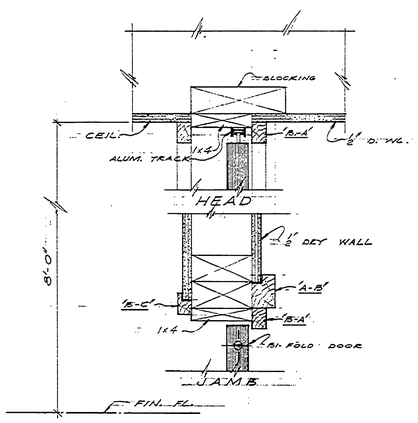

DETAIL
TYPICAL CLOSET DOOR

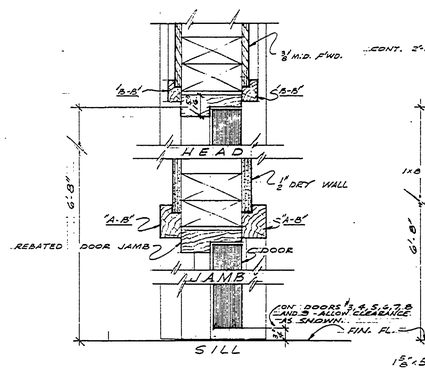

DETAIL
TYPICAL INT. DOOR

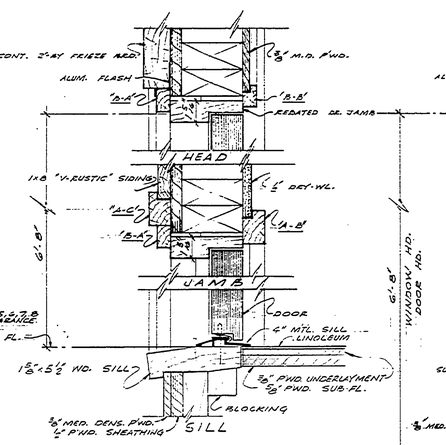

DETAIL
TYPICAL EXT. DOOR

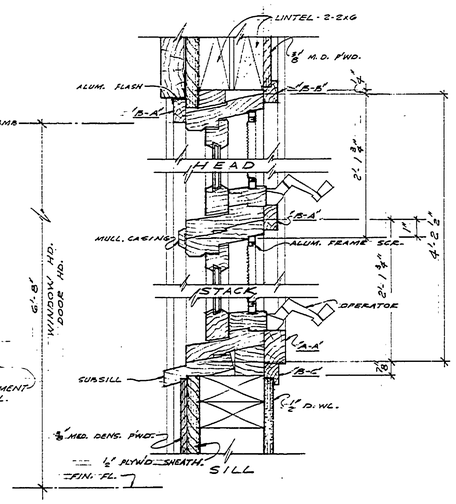

DETAIL
TYPICAL WINDOW
(ELEVATION SECT.)

NOTE - ALL DETAILS ABOVE — 3"=1'-0" SCALE

DATE	REVIEWED	DATE	APPROVED
	ARCHITECTURAL		CHIEF OF DIVISION
	ENGINEERING		ASST. CHIEF OF DIVISION
	LANDSCAPE		CHIEF OF PLANNING AND CONSTRUCTION

DESIGNED BY	WP WWL	4-25-66 10-24
DRAWN BY	CT	
CHECKED BY	WWL	

DATE	NO.	DATE	BY	REVISIONS	DATE	BY
	1			4		
	2			5		
	3			6		

CONSERVATION COMMISSION APPROVAL
BY: _____ DATE: _____

DESIGN
RECOMMENDED FOR APPROVAL: _____ DESIGNER _____ DATE
RECOMMENDED FOR APPROVAL: _____ IN CHARGE OF DESIGN _____ DATE

SECTION APPROVAL
BY: _____ SECTION CHIEF _____ DATE: _____

MICHIGAN
DEPARTMENT OF CONSERVATION
APPROVED: _____ CHIEF ENGINEER _____ DATE

PLAN No.	PROJECT NUMBER	SHEET OF

MICHIGAN
DEPARTMENT OF CONSERVATION
PARKS AND RECREATION DIVISION

HIGGINS LAKE S. P.
RESIDENCE # 1

SHEET NO. 4 OF 6

PLAN NO. A-1.06