COMMERCIAL BLUEPRINT SERVICE 700 6-72 457164

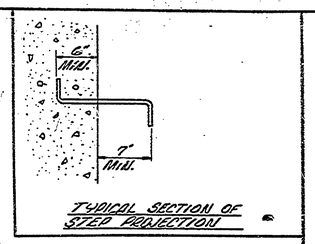

TYPICAL SECTION OF STEP PROJECTION

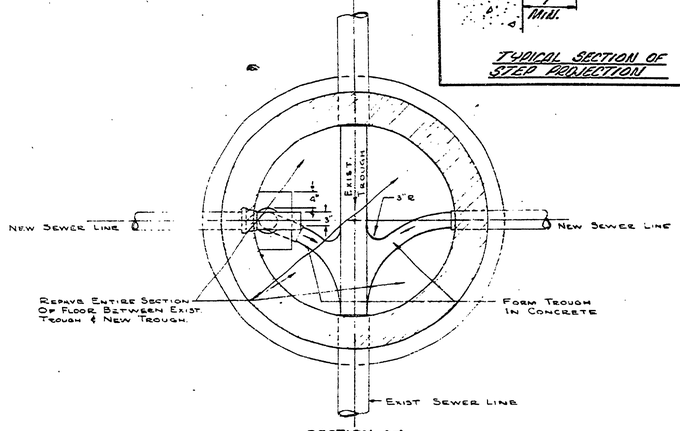

SECTION A-A

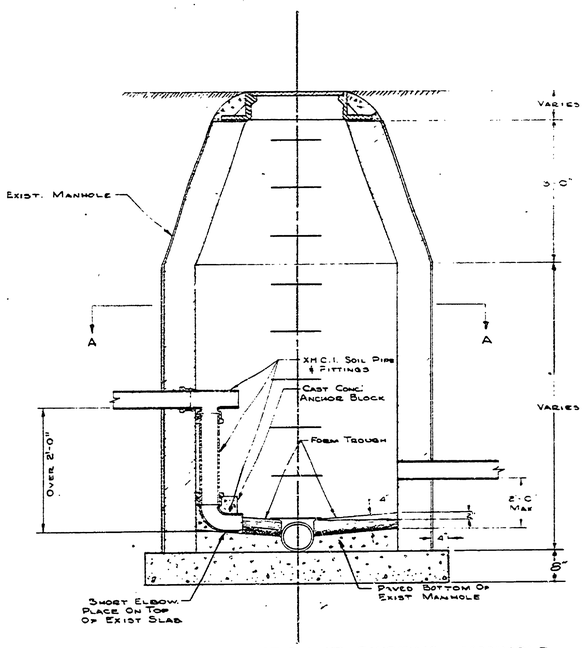

STANDARD CONNECTION AT EXISTING MANHOLE

SCALE $\frac{3}{4}$" = 1'-0"

NOTES:

1) TOP STEP TO BE 1'-6" BELOW TOP OF CASTING.
2) CLEAR LENGTH OF STEPS SHALL BE 16" MIN.
3) METAL STEPS SHALL BE 3/4" MIN. DIA. STEEL ROD OR EQUIVALENT MATERIAL.

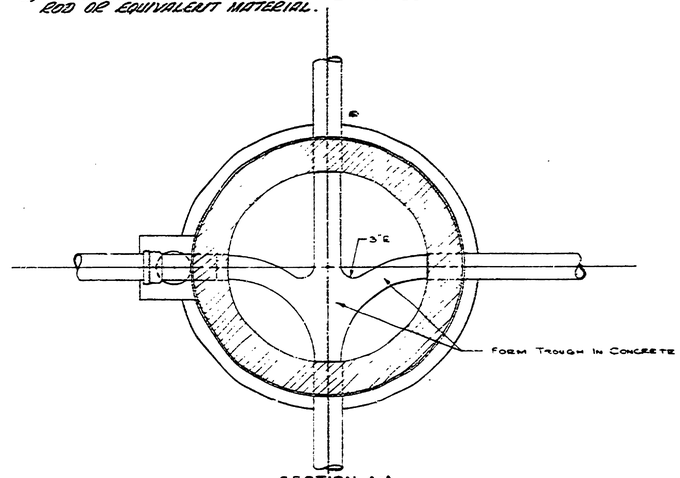

SECTION A-A

MIN. WALL THICKNESS

M. H. DEPTH	BRICK	CONC BLOCK	PRECAST CONC.
0'-10'	8"	6"	6"
10'-15'	12"	8"	8"
15'-25'	16"	12"	12"

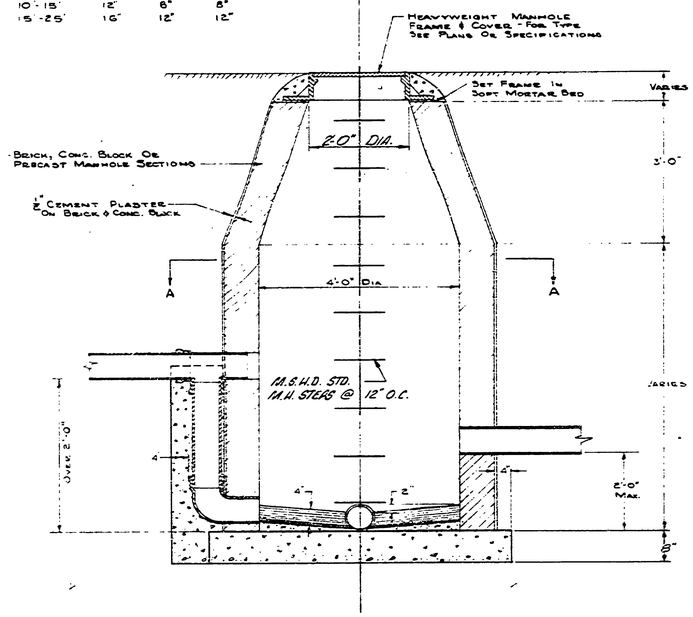

STANDARD MANHOLE (NEW CONSTRUCTION)

SCALE $\frac{3}{4}$" = 1'-0"

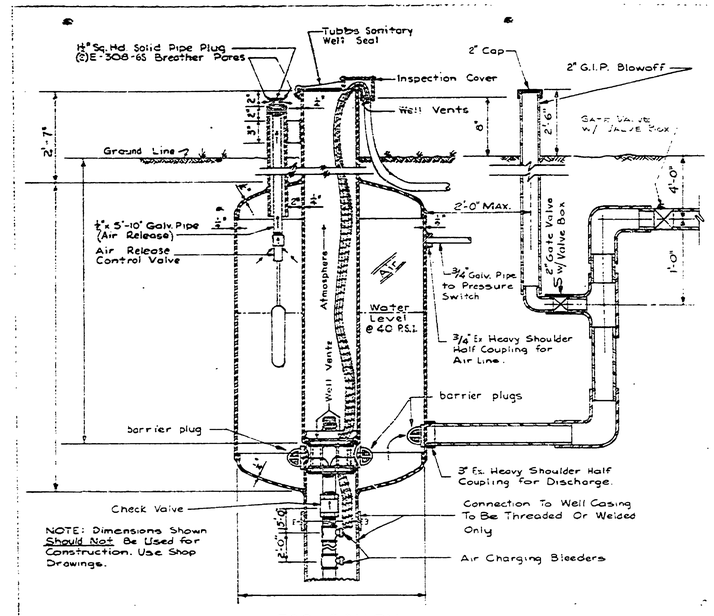

500 GALLON PITLESS ADAPTER TANK

No Scale

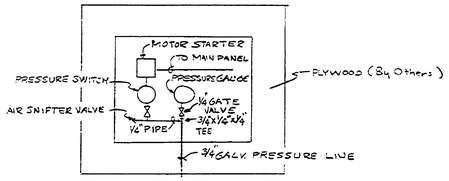

PUMP CONTROL PANEL DETAIL

SURVEYED BY		DRAWN BY		NO.	DATE	BY	REVISIONS	NO.	DATE	BY	REVISIONS	MICHIGAN DEPARTMENT OF NATURAL RESOURCES	STANDARD MANHOLE & Pitless Adapter Tank (SHEET TITLE)	NORTH HIGGINS LAKE STATE PARK (AREA OR PARK)	PROJECT NO. 24-1578
DESIGNED BY		CHECKED BY		1.				3.						BEACH DEVELOPMENT (PROJECT)	SHEET 5 OF 5 — PLAN NO. E-107
	DATE		DATE	2.				4.							