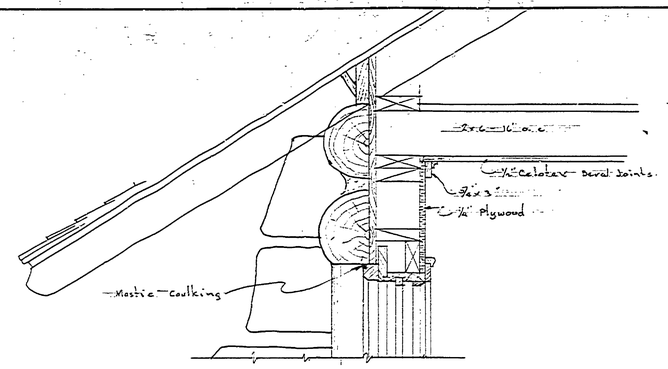

DETAIL E
Scale 1½" = 1'-0"

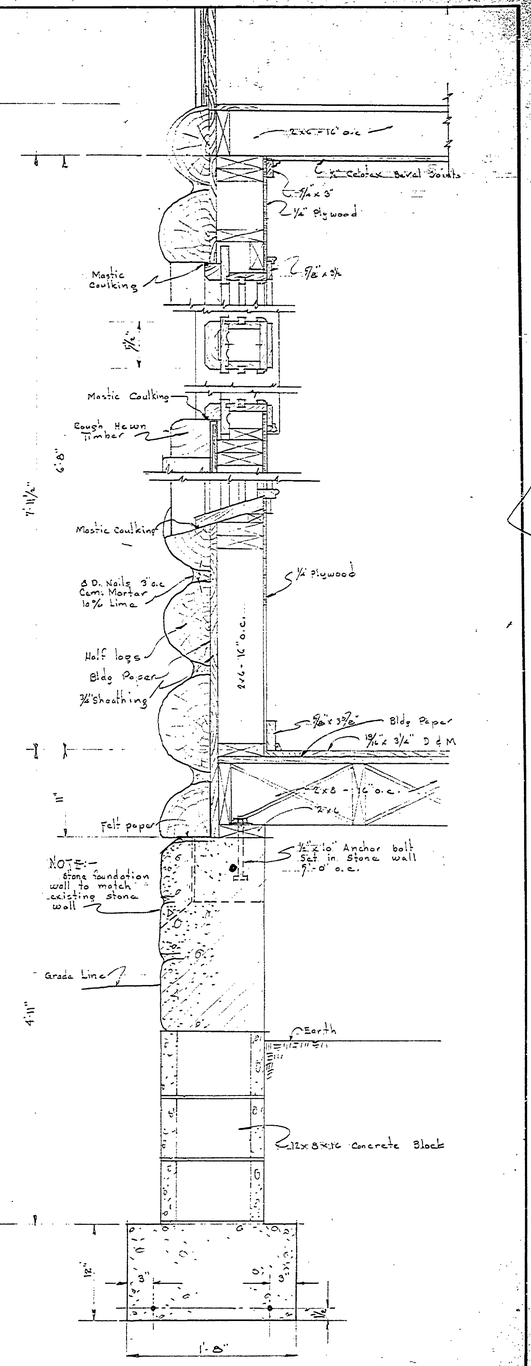

TYPICAL SECTION THRU ADDITION
Scale 1½" = 1'-0"

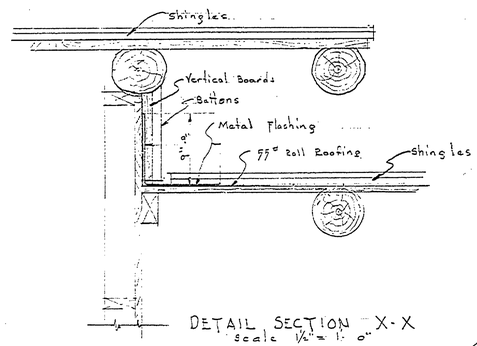

DETAIL SECTION X-X
Scale 1½" = 1'-0"

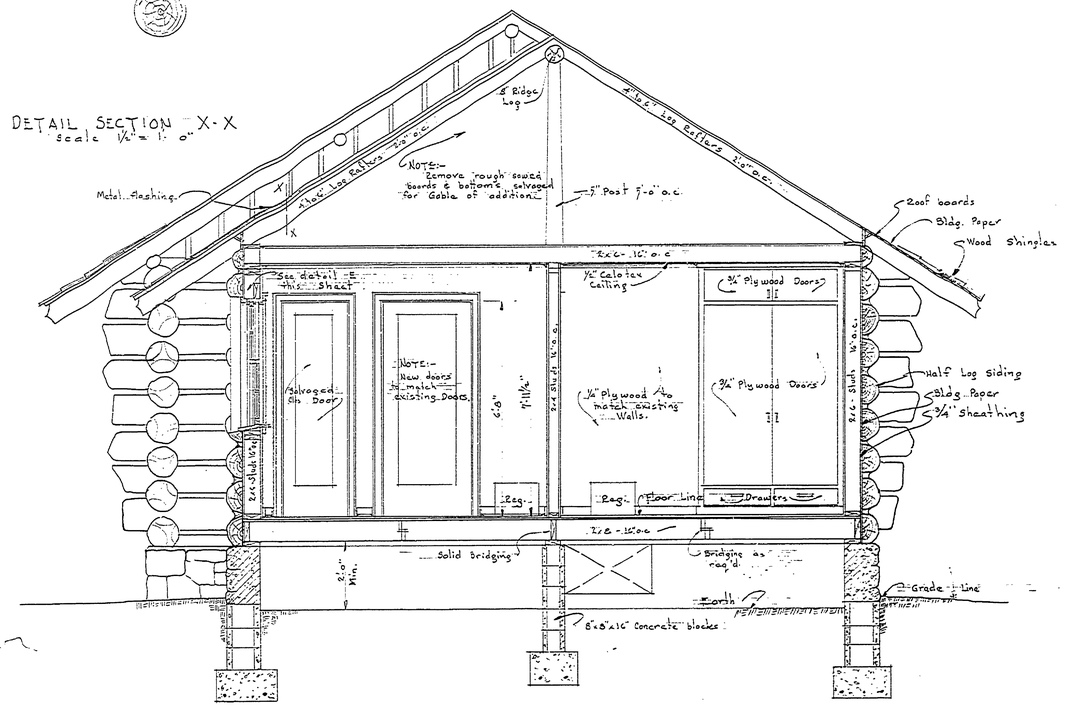

SECTION THRU ADDITION
Scale 1/4" = 1'-0"

NO.	DATE	BY
1	8-27-61	WLA
2		
3		

REVISIONS

4		
5		
6		

DATE		BY

APPROVED BY

ASSISTANT CHIEF IN CHARGE OF DESIGN

DATE

REVIEWED BY SECTIONS

		DATE
ARCHITECTURAL		
ENGINEERING		
LANDSCAPE		

DESIGNED BY	E.D. HEGELE	7/21/34
DRAWN BY	J.W.T.	7/14/61
TRACED BY	J.W.T.	
CHECKED BY		
DATE		

MASTER PLAN BLDG. NO. 2

MICHIGAN
DEPARTMENT OF CONSERVATION
PARKS AND RECREATION DIVISION

INDIAN LAKE STATE PARK
ADDITION TO
SUPERINTENDENT'S RESIDENCE

SHEET NO. 4 OF

PLAN NO. A-99