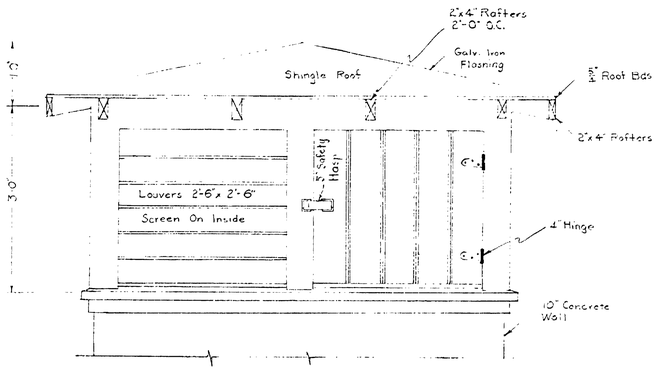

REAR ELEVATION
Scale 1"=1'-0"

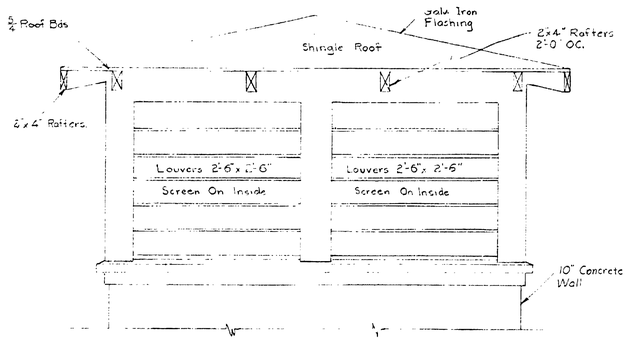

SIDE ELEVATION
Scale 1"=1'-0"

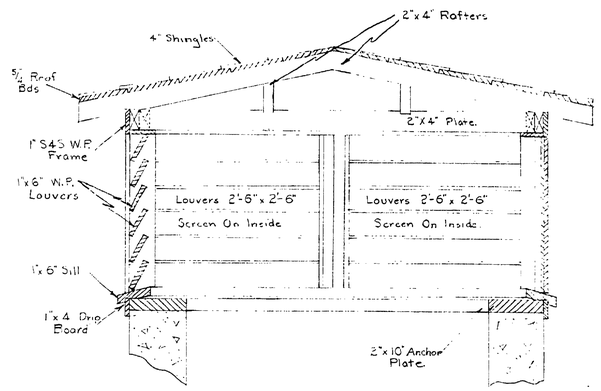

WALL SECTION C-C
Scale 1"=1'-0"

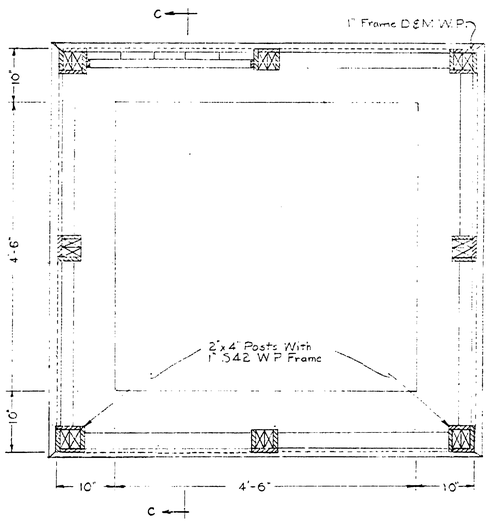

WALL DETAILS
Scale 1"=1'-0"

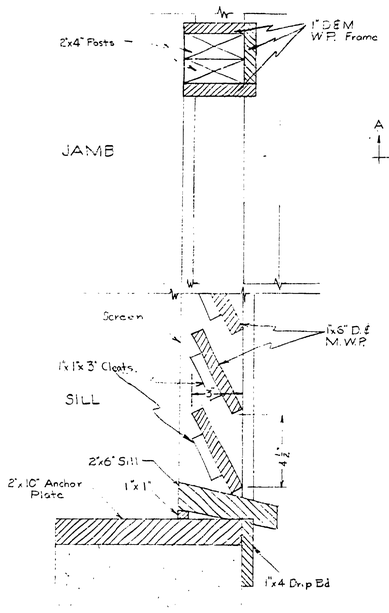

LOUVER & DOOR SECTIONS
Scale 3"=1'-0"

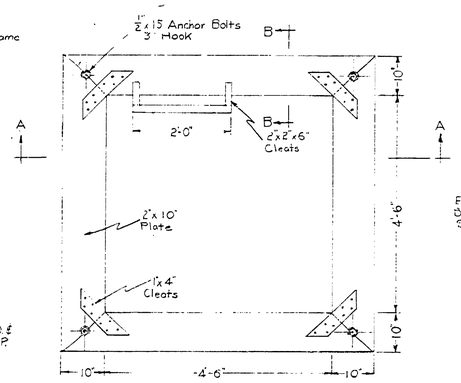

NOTE:
Existing Anchorage Will Be Utilized To The Extent Shown.

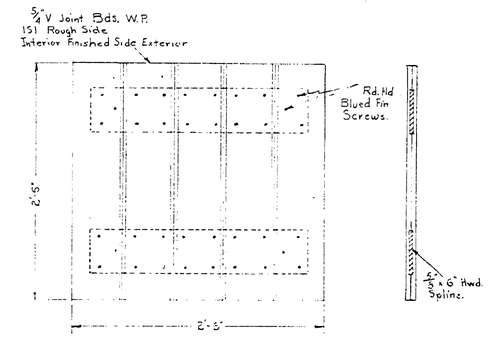

DOOR DETAILS
Scale 1½"=3'-0"

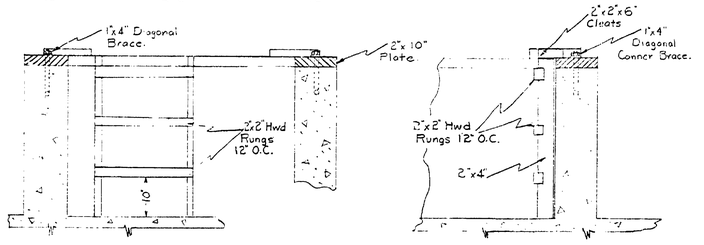

SECTION A-A

ANCHOR PLATE & LADDER DETAILS
Scale ¾"=1'-0"

REVISIONS			
NO.	DATE	BY	
1			
2			
3			
4			
5			
6			

REVIEWED BY SECTIONS		DATE
ARCHITECTURAL	[illegible]	4/11/46
ENGINEERING	[illegible]	[illegible]
LANDSCAPE	[illegible]	4/12/46

APPROVED BY [illegible]
ASSISTANT CHIEF IN CHARGE OF DESIGN
DATE 4-12-46

DRAWN BY C.G.F.
TRACED BY
CHECKED BY
DATE 4-12-46

MICHIGAN
DEPARTMENT OF CONSERVATION
PARKS AND RECREATION DIVISION

BARAGA STATE PARK
PUMP HOUSE ROOF
SCALE AS SHOWN

SHEET NO. ___ OF ___

PLAN NO. A-102