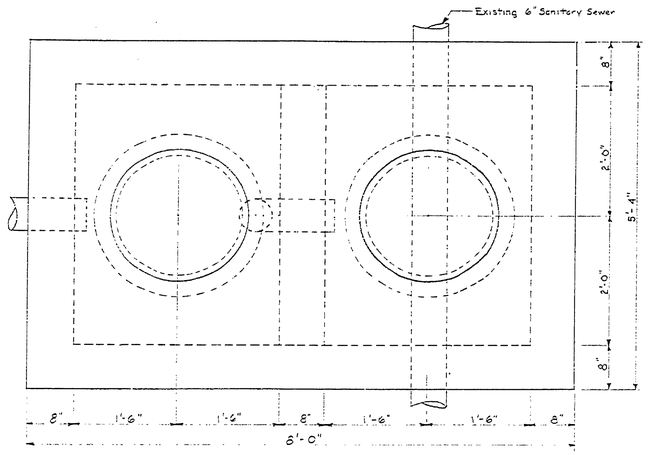

PLAN

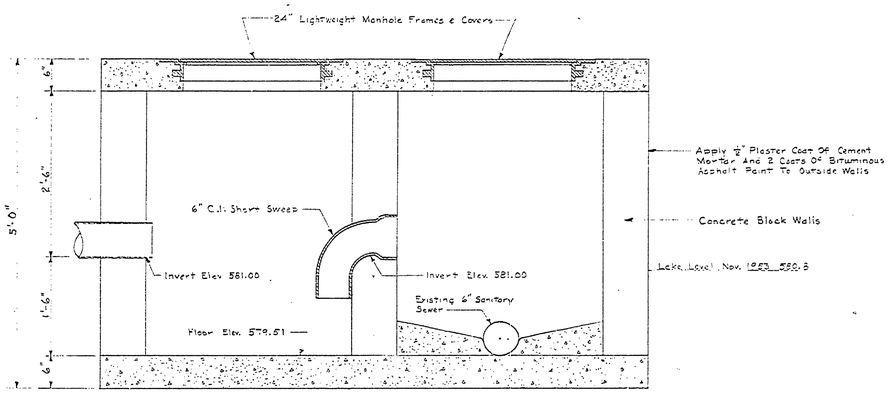

LONGITUDINAL SECTION

SAND TRAP AND MANHOLE STRUCTURE
Scale 1" = 1'-0"

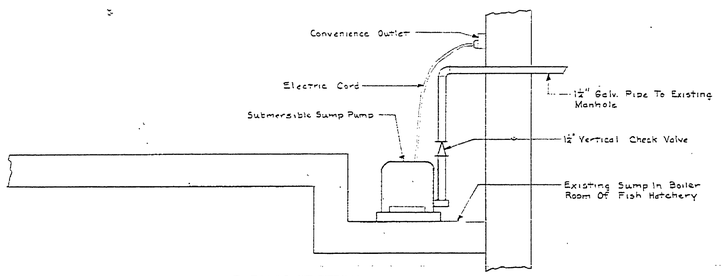

PIPING DETAIL
Scale 1" = 1'-0"

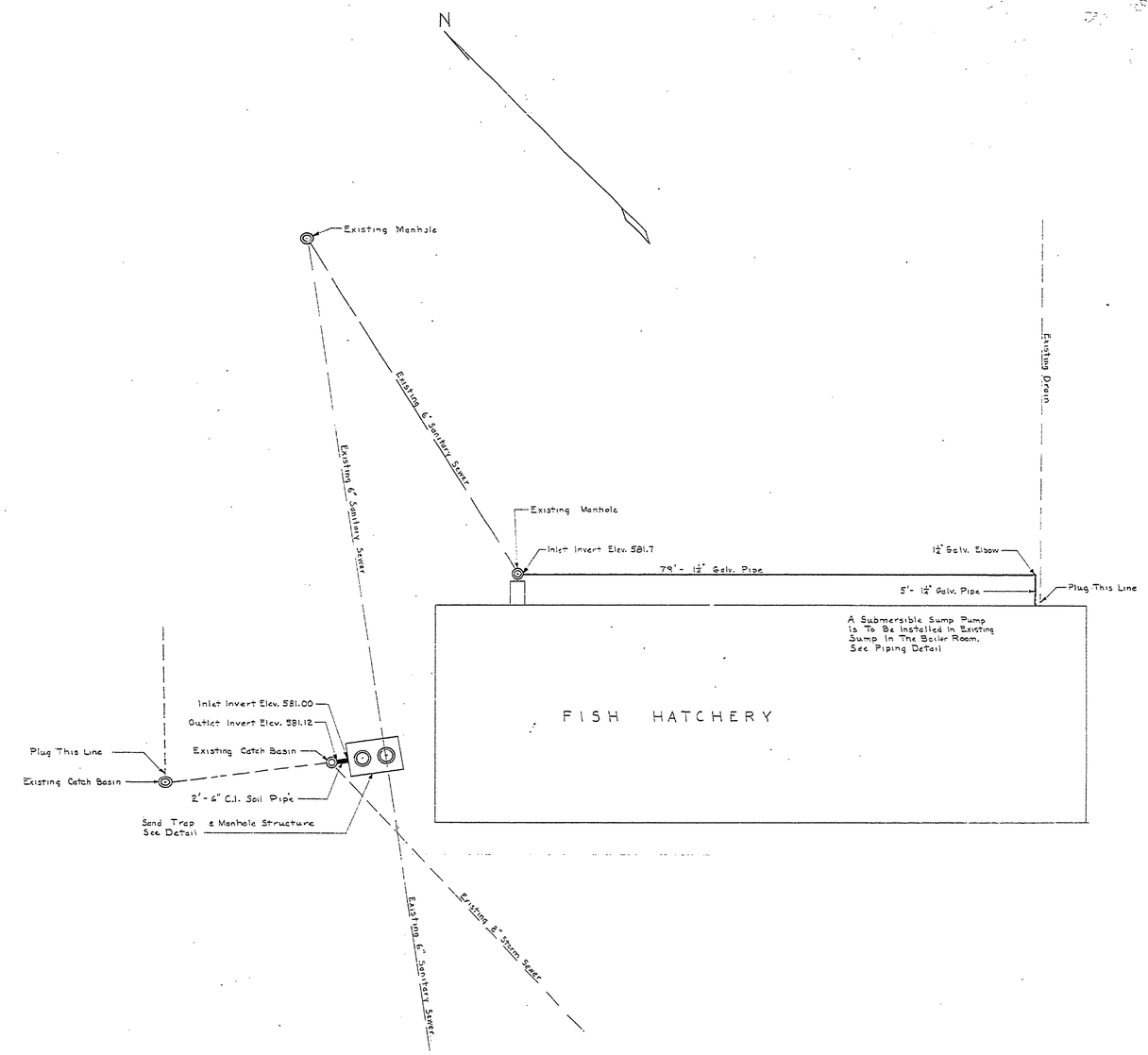

PLAN
Scale 1" = 10'

REVISIONS			
No.	DATE	BY	
1			
2			
3			
4			
5			
6			

DRAWN BY	B H G	APPROVED BY	
TRACED BY		REVIEWED BY SECTIONS	
CHECKED BY	E.J.P.	ARCHITECTURAL	J.T.R. 7-13-54
		ENGINEERING	H.C.M. 24 JUL 54
		LANDSCAPE	J.T.R. 7-13-54
DATE	19 May 1954	ASSISTANT CHIEF IN CHARGE OF DESIGN	DATE 7-15-54

PROJECT NO. 164 - 75 - D

MICHIGAN
DEPARTMENT OF CONSERVATION
PARKS AND RECREATION DIVISION

BAY CITY STATE PARK
REPAIRS TO FISH HATCHERY DRAIN
Scale As Shown

SHEET NO. 1 OF 1

PLAN NO. E - 90