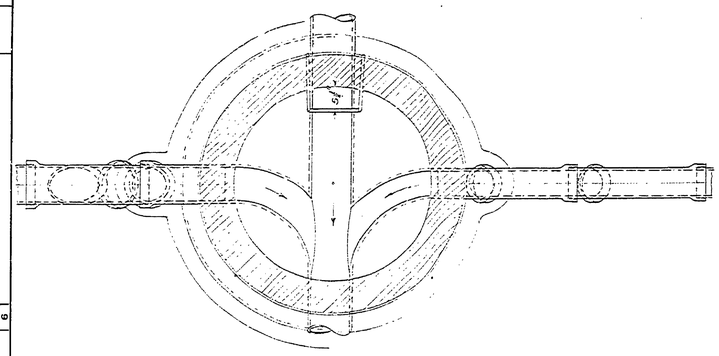

SECTION A-A

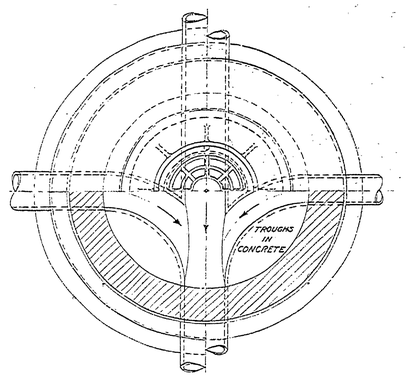

HALF PLAN & SECTION B-B

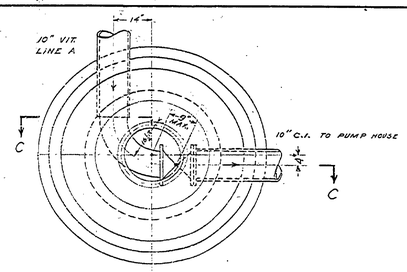

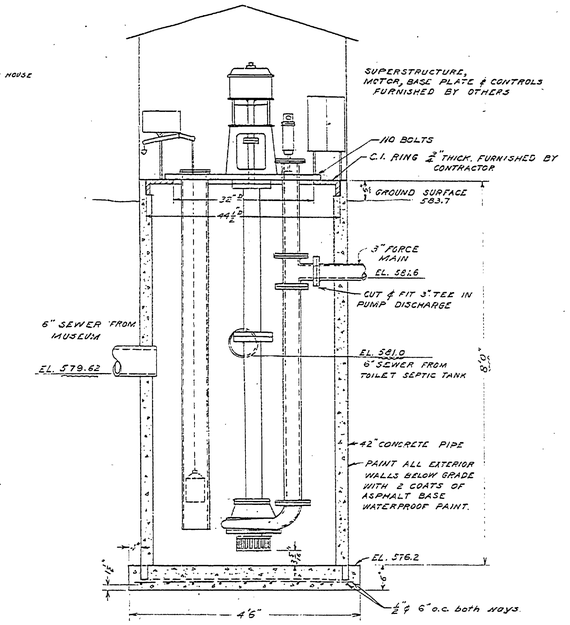

LIFT STATION
3/4" = 1'0"

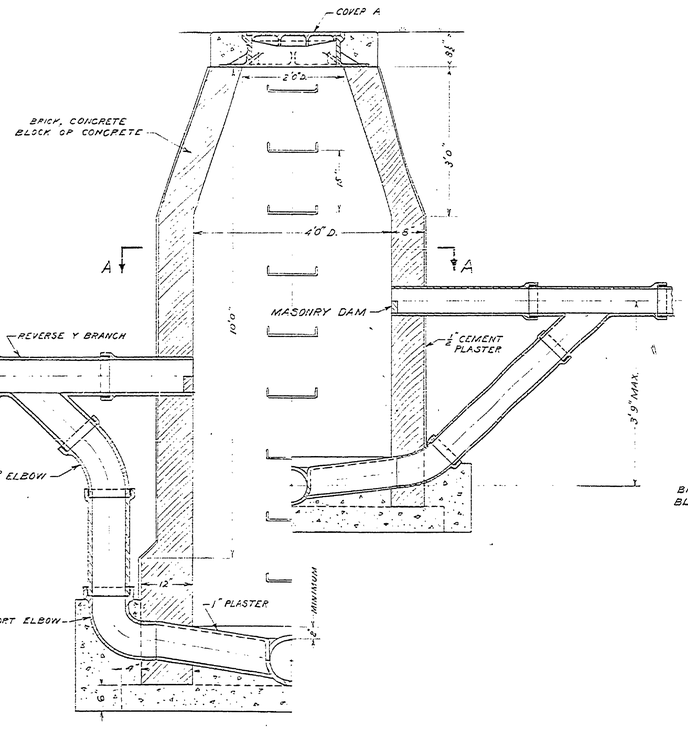

TYPICAL DROP MANHOLES
3/4" = 1'0"

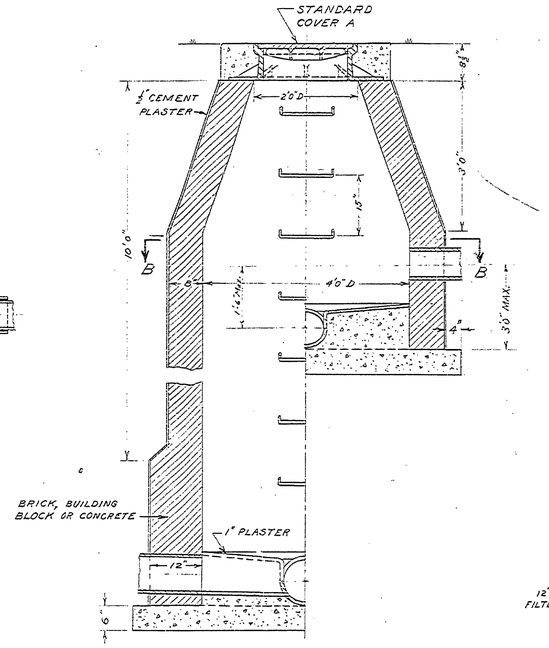

TYPICAL MANHOLE

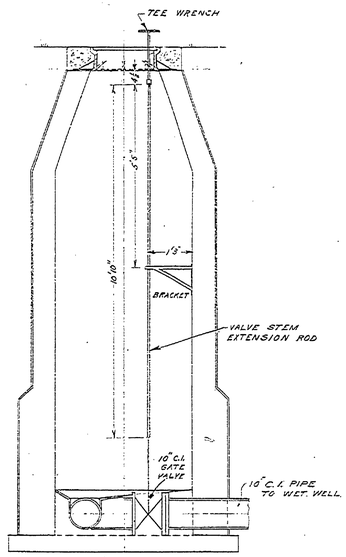

SECTION C-C
MANHOLE #1
1/2" = 1'0"

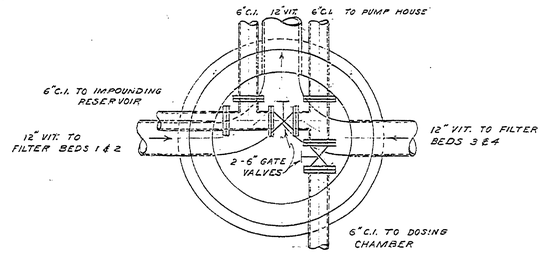

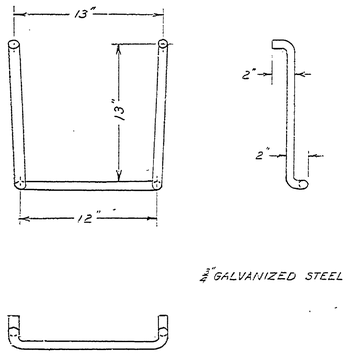

STEP DETAIL
2" = 1'0"

MANHOLE #34
1/2" = 1'0"
TO BE BUILT AFTER VALVES ARE FITTED

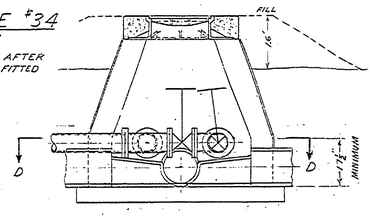

REVISIONS			
No.	DATE	BY	
1			
2			
3			
4			
5			
6			

APPROVED BY
ASSISTANT CHIEF IN CHARGE OF DESIGN — DATE 8-8-50

REVIEWED BY SECTIONS

		DATE
ARCHITECTURAL	J.T.R.	8-8-50
ENGINEERING	H.C.H.	8-8-50
LANDSCAPE	J.T.R.	8-8-50

DRAWN BY G. HALIK
TRACED BY
CHECKED BY E. J. P.
DATE AUG. 23, 1950

MANHOLES, LIFT STATION & STEPS

MICHIGAN
DEPARTMENT OF CONSERVATION
PARKS AND RECREATION DIVISION

BAY CITY STATE PARK
SANITARY SEWERAGE SYSTEM
SCALE: AS SHOWN

SHEET NO. 15 OF 16

PLAN NO. E-107