D. K. ELLIOTT CO. 70812 500 3-58

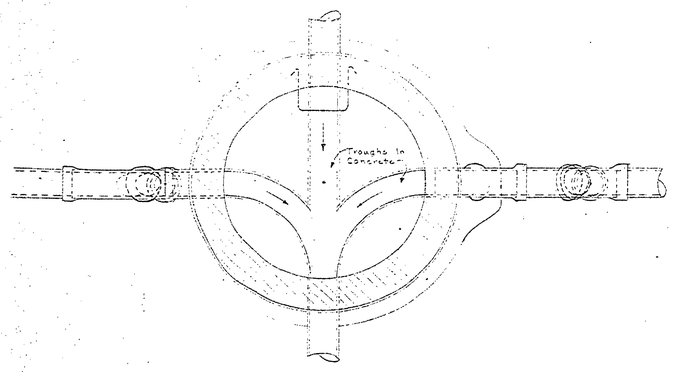

PLAN SECTION A-A

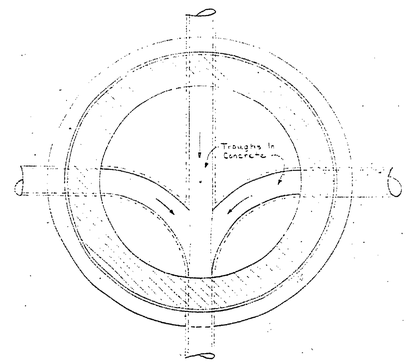

PLAN SECTION B-B

SECTION H-H

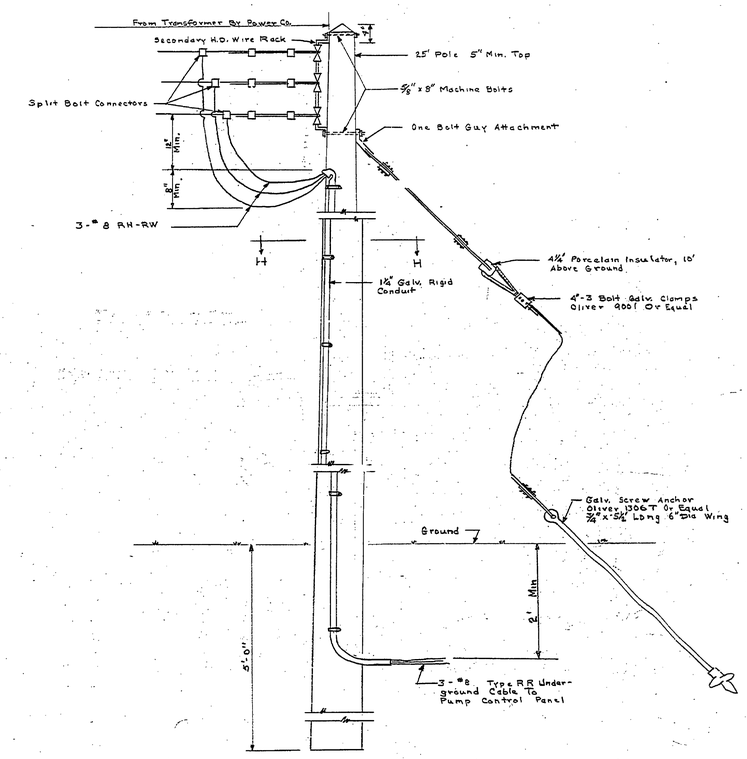

3 PHASE SWITCH & METER SERVICE
Not To Scale

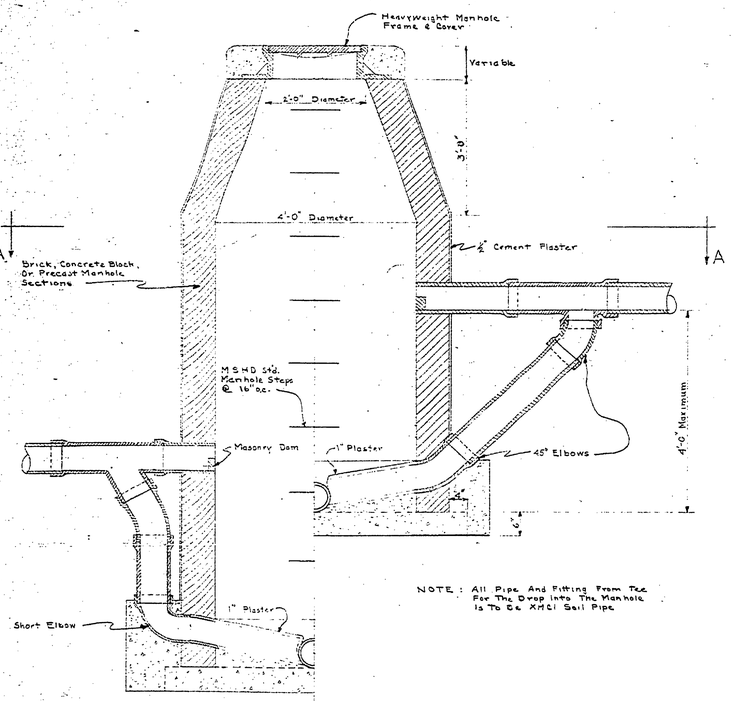

NOTE: All Pipe And Fitting From The Pier The Drop Into The Manhole Is To Be XHCI Soil Pipe

LONG DROP SHORT DROP

SECTION

DROP MANHOLE
Scale ¾" = 1'-0"

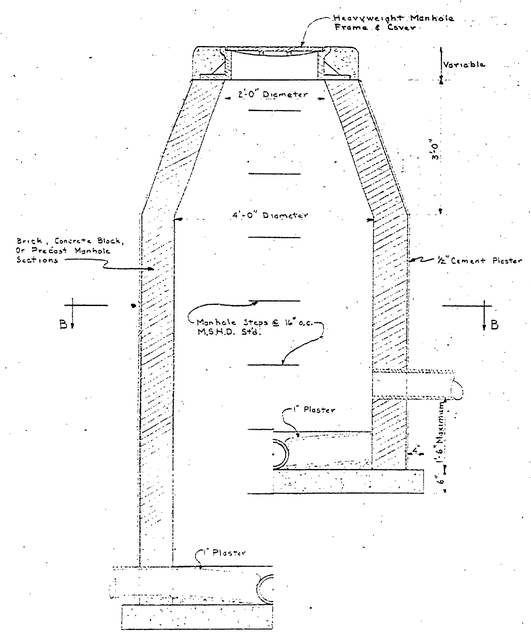

SECTION

REGULAR MANHOLE
Scale ¾" = 1'-0"

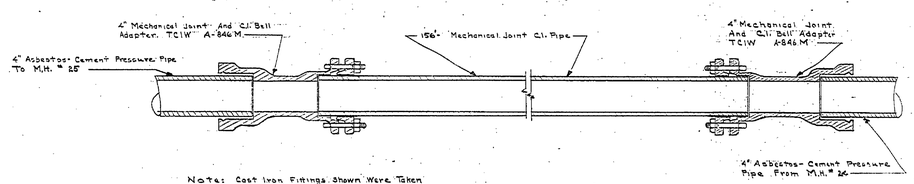

Note: Cast Iron Fittings Shown Were Taken From The Traverse City Iron Works Catalog

CONNECTION DETAIL FOR LAGOON CROSSING
Scale 1½" = 1'-0"

NO.	DATE	BY	REVISIONS
1			4
2			5
3			6

		DATE	BY
APPROVED BY	RCM		
ASSISTANT CHIEF IN CHARGE OF DESIGN		Sep-62	

REVIEWED BY SECTIONS		DATE
ARCHITECTURAL	J.I.R.	3-29-60
ENGINEERING	J.I.R.	3-29-60
LANDSCAPE	J.I.R.	3-29-60

DRAWN BY B. H. G.
TRACED BY
CHECKED BY E. J. P.
DATE 18 March 1960

MICHIGAN
DEPARTMENT OF CONSERVATION
PARKS AND RECREATION DIVISION

YANKEE SPRINGS RECREATION AREA
GUN LAKE DAY USE SECTION
CENTRAL SEWAGE DISPOSAL SYSTEM

SHEET NO. 6 OF 6

PLAN NO. E-136