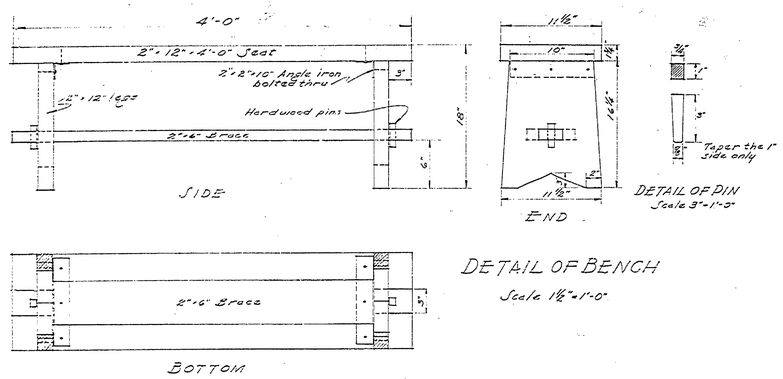

DETAIL OF BENCH

Scale 1½"=1'-0"

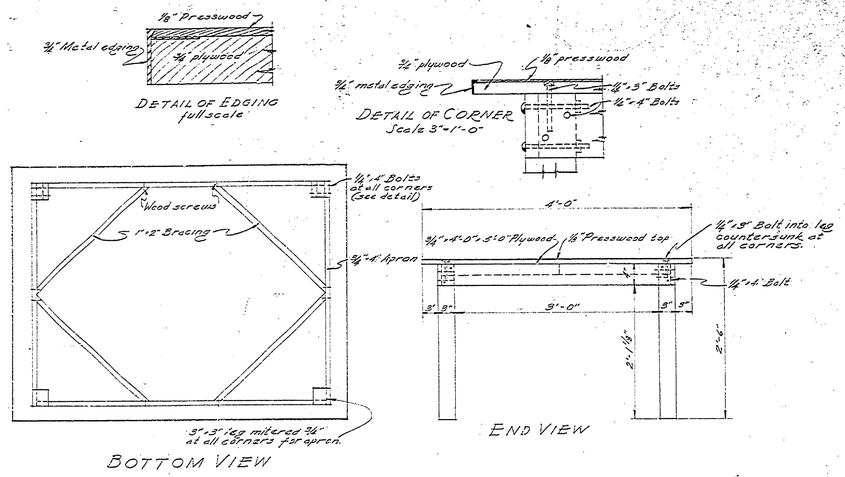

DETAIL OF TABLE

Scale 1"=1'-0"

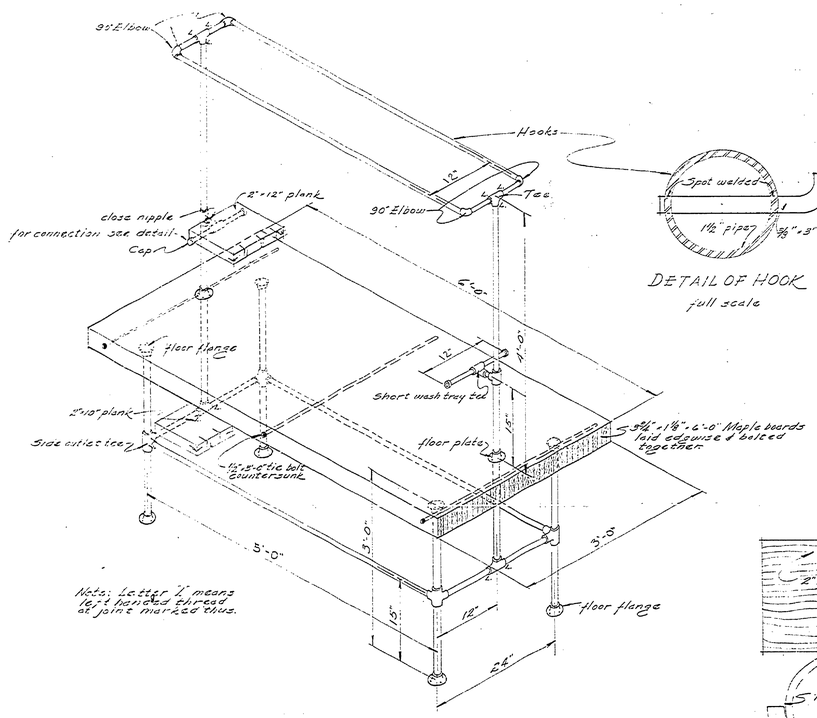

DETAIL OF KITCHEN TABLE

SCALE 1"=1'-0"

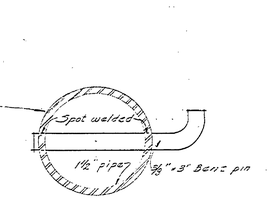

DETAIL OF HOOK

full scale

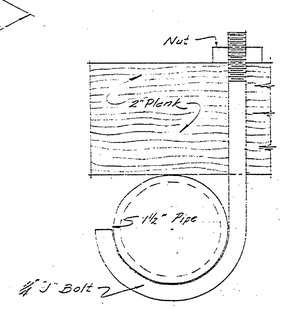

DETAIL OF SHELF

full scale

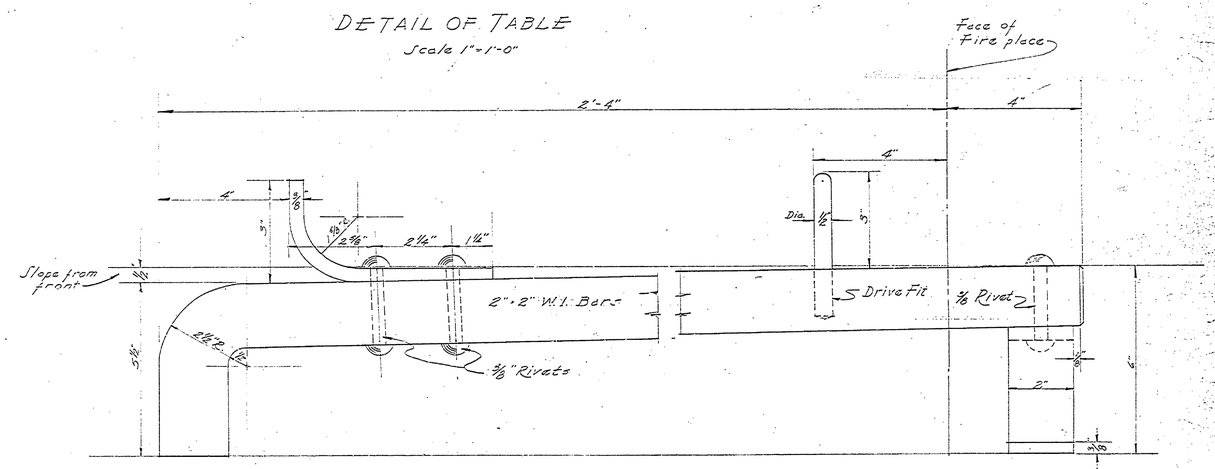

ELEVATION

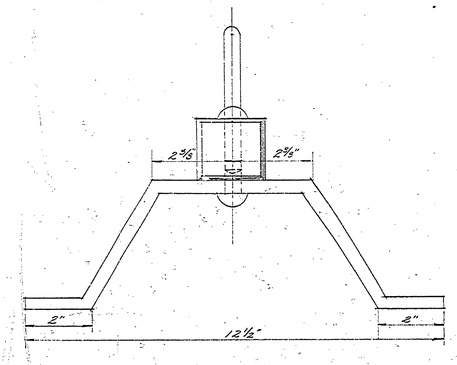

END

DETAIL OF ANDIRONS

Scale ½"=1'-0"

A-102

MICHIGAN DEPARTMENT of CONSERVATION
United States
DEPARTMENT OF THE INTERIOR
NATIONAL PARK SERVICE
COOPERATING

DRAWN BY C. T. COOLTEE	LUDINGTON STATE PARK	File No. Lud-102-A
DESIGNED E. HARTWIGE	GROUP CAMP BUILDING	Scale as shown
CHECKED BY	DINING HALL	Sheet No. 2 of 2
		Date 4-17-40

PREPARED — CHIEF, PLANS DIVISION — 8/7/40 DATE
APPROVED — INSPECTOR — DATE
APPROVED — DATE

INSURANCE #14
MASTER PLAN #9