R-1538 COMMERCIAL BLUEPRINT SERVICE 5-69

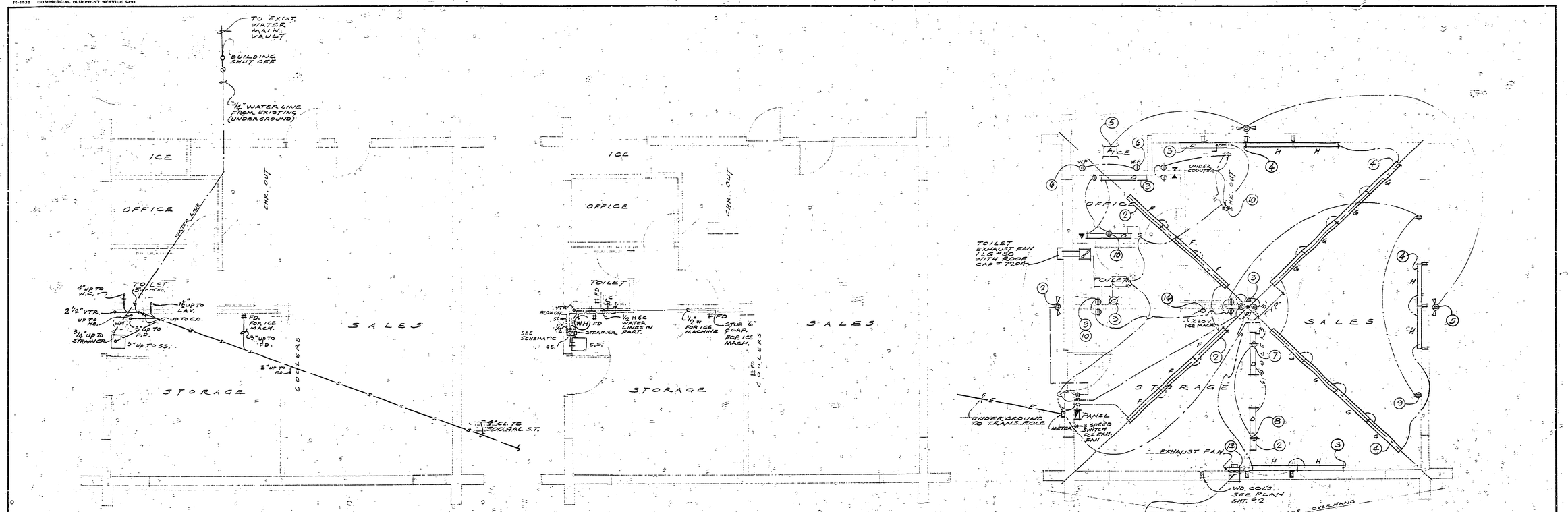

PLUMBING - UNDERGROUND

1/4" = 1'-0"

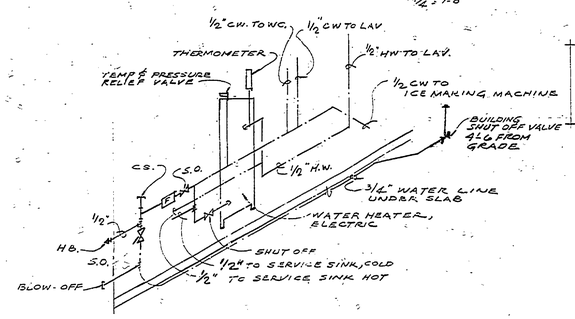

SCHEMATIC - WATER

SYMBOLS

H.B. - HOSE BIBB
M.S.O. - SHUT OFF
- FILTER
C.S. - CAPPED STANDPIPE

PLUMBING - ABOVE GROUND

1/4" = 1'-0"

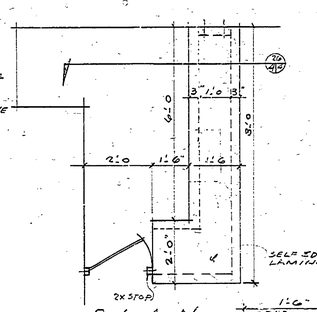

PLAN

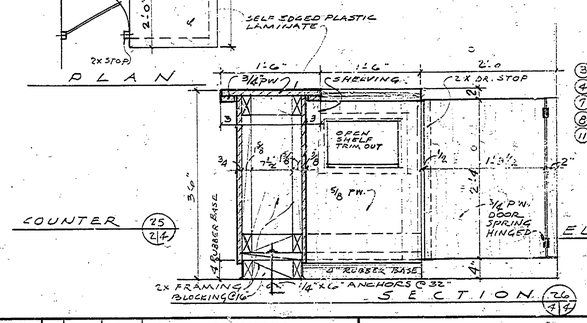

COUNTER (25) (2/4)

SECTION (26) (4/4)

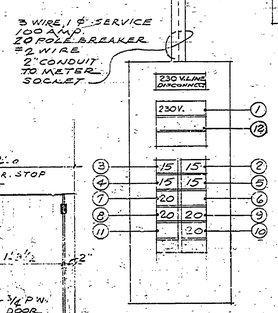

ELECTRICAL

1/4" = 1'-0"

FIXTURE SCHEDULE

MARK	NO. REQ'D	MANUFACTURE & NUMBER	REMARKS
A	1	SOLUX, AKV 45, INCAND.	(2) 75 WATT, CEILING MOUNT
B	3	SWIVELIER # 1142, INCAND.	(2) PAR 38, 150 W. FLOOD, WALL MOUNT W/ WP BOX, 9' HIGH
C	1	SOLUX, AKV 64, INCAND.	(2) 75 W., WALL MOUNT ABOVE MIRROR, HORIZONTAL
D	5	SOLUX, F250D-24, FLUOR.	(2) 40 W, R.S., WALL MOUNT 7' HIGH
E	4	SOLUX, F70PJ-24, FLUOR.	(2) 40 W, R.S., VERT. MT. HIGH AS POSS. ON CENTER POST
F	2	SOLUX, F70PJ-24, FLUOR. (1/4" = 1'-0" LONG)	(6) 40 W, R.S., MOUNT ON BEAM
G	2	SOLUX, F70PJ-24, FLUOR. (1'-8" LONG)	(8) 40 W, R.S., MOUNT ON BEAM
H	6	SOLUX, F70PJ-24, FLUOR. (1'-8" LONG)	(2) 40 W, R.S., MOUNT HORIZ. ON N & E & S. WALLS @ SILL HEIGHT

CIRCUIT DATA

1	230 V	HOT WATER HEATER
2	115 V	WEST OVER HEAD & OUTSIDE LIGHTING & COOLER AREA LIGHTING
3	115 V	CENTER COLUMN LIGHTS & TOIL., OFFICE & COUNTER LIGHTING
4	115 V	EAST OVERHEAD LIGHTING
5	115 V	NORTH & EAST OUTSIDE LIGHTING
6	115 V	WEATHER PROOF OUTLETS, ICE MACHINE
7	115 V.	CONV. OUTLET FOR COOLER
8	115 V.	CONV. OUTLET FOR COOLER
9	115 V	RECEPTACLES CONVENIENT OUTLETS FOR TOIL., SERVICE & DISPLAY AREA
10	115 V.	" " " " " " "
11	115 V.	EXHAUST FAN " " " OFFICE & COUNTER AREA
12	230 V	ICE MACHINE IN STORAGE ROOM

WATER HEATER - RUDD, 20 GAL - 2 ELEMENT, LOW BOY (1000 W. & 600 W)

SURVEYED BY		DRAWN BY R.R.	9/22/70	NO.	DATE	BY	REVISIONS	NO.	DATE	BY	REVISIONS	MICHIGAN DEPARTMENT OF NATURAL RESOURCES	PLUMBING, ELECTRICAL & DETAILS
DESIGNED BY T.P.		CHECKED BY T.P.	10/8/70	1.				3.					SHEET TITLE
	DATE		DATE	2.				4.					

LUDINGTON STATE PARK — AREA OR PARK
CAMPGROUND STORE — PROJECT 24-1085
PROJECT NO. 24-1085
SHEET 4 OF 4
PLAN NO. A-110