R-1638 COMMERCIAL BLUEPRINT SERVICE 800 11-74 B8602

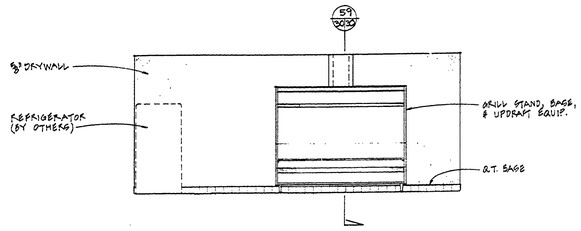

INTERIOR ELEVATION 56 / 23 30

SCALE — ½": ONE FOOT

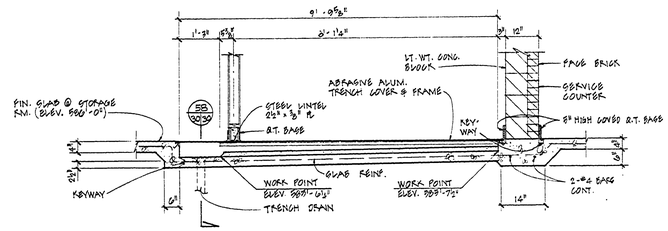

SECTION 57 / 23 30

SCALE ½": ONE FOOT

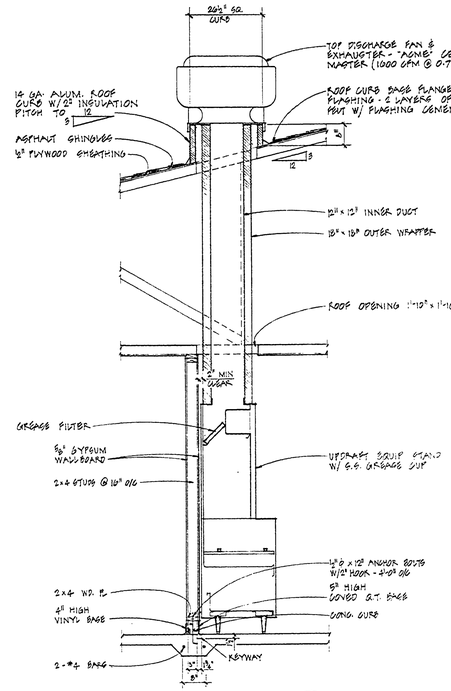

SECTION 59 / 30 30

SCALE ½": ONE FOOT

31,23

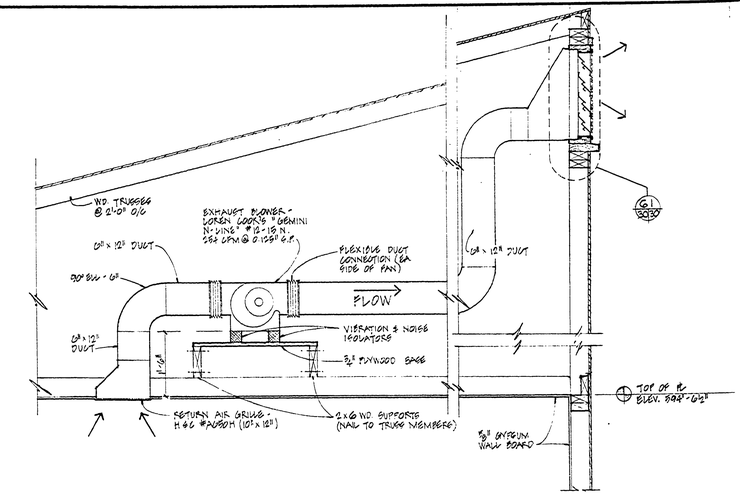

SECTION 60 / 28 30

SCALE ½": ONE FOOT

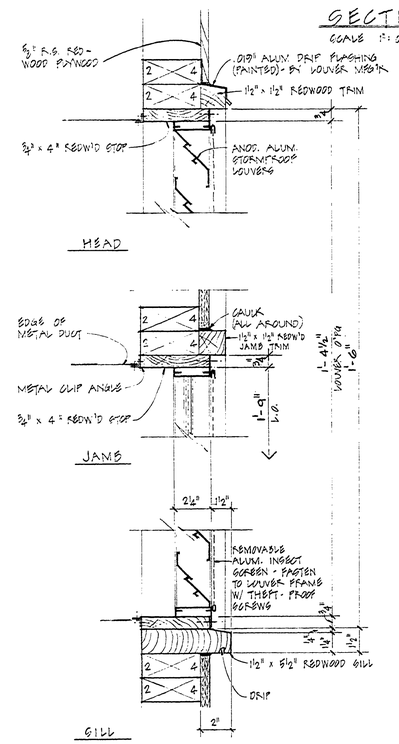

DETAIL 61 / 30 30

SCALE 3": ONE FOOT

28 SIMILAR

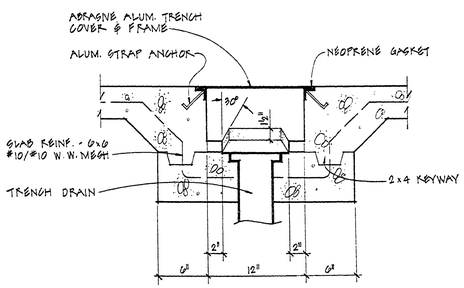

SECTION 58 / 30 30

SCALE 1½": ONE FOOT

SURVEYED BY		DRAWN BY	4/77	NO.	DATE	BY	REVISIONS	NO.	DATE	BY	REVISIONS	MICHIGAN DEPARTMENT OF NATURAL RESOURCES	MECH. EQUIP. & DETAILS
DESIGNED BY M. LEGAILE		CHECKED BY		1.				3.					SHEET TITLE
	DATE		DATE	2.				4.					

BAY CITY STATE PARK — AREA OR PARK

BEACH HOUSE — PROJECT

PROJECT NO. 24-1582

SHEET 30 OF 37

PLAN NO. A-111