PB-1083 IMAGE MEDIA 21-32-01 300 6-81 76507*

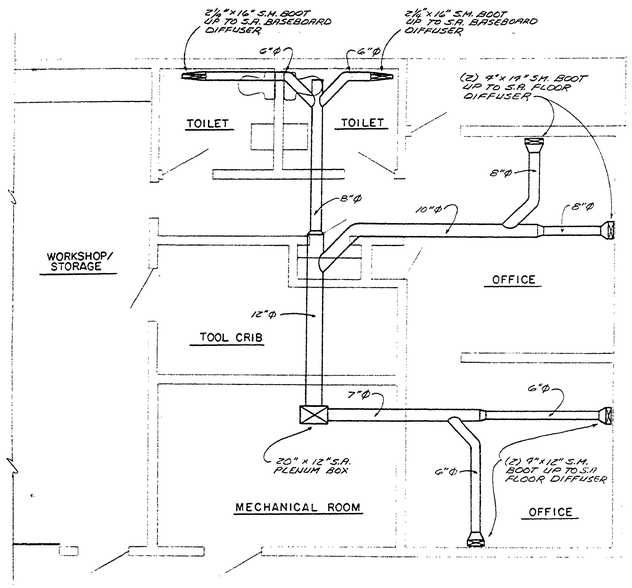

UNDER SLAB HEATING PLAN

SCALE 1/4"=1'-0"

MECHANICAL NOTES

1. SHEET METAL DUCT WORK - SUPPLY, RETURN, FRESH AIR, AND COMBUSTION AIR DUCT WORK SHALL BE FABRICATED FROM ZINC - COATED (GALVANIZED) STEEL SHEETS TO THE WEIGHT SCHEDULE AND CONSTRUCTION METHODS AS PUBLISHED BY THE SHEET METAL AND AIR CONDITIONING CONTRACTORS NATIONAL ASSOCIATION (SMACNA) FOR LOW PRESSURE SYSTEM DISTRIBUTION.
2. UNDER FLOOR DUCTS - SHALL BE JOHNS-MANVILLE TRANSITE ASBESTOS CEMENT OR APPROVED EQUAL, WITH FITTINGS FOR CONNECTIONS, HANGERS, AND FLOOR GRILLES AS DETAILED AND SHOWN ON THIS SHEET. INSTALLATION SHALL BE MADE IN COMPLETE ACCORDANCE WITH REC-OMMENDATIONS OF THE MANUFACTURER. ALL JOINTS TO BE WATERPROOF AND PROPERLY SUPPORTED.
3. DUCT WORK SHALL BE TRUE TO DIMENSIONS ON DRAWING WHICH INDICATE THE CLEAR INSIDE DIMENSION REQUIRED. WHERE DUCTWORK IS LINED, OUTSIDE DIMENSIONS OF DUCTS SHALL BE INCREASED ACCORDINGLY.
4. INSULATION - FRESH AIR DUCTS AND SUPPLY AIR DUCTS ABOVE CEILINGS AND COMBUSTION AIR DUCT SHALL BE INSULATED WITH 1 INCH THICK, 3/4 LB. DENSITY FLEXIBLE GLASS BLANKET WITH FOIL VAPOR BARRIER. ALL JOINTS TO BE SEALED WITH 6 INCH VAPORPROOF TAPE.
5. TEMPERATURE CONTROL - WARM AIR FURNACES SHALL BE CYCLED BY WALL MOUNTED THERMOSTAT. COMBUSTION AIR LOUVER SHALL BE ELECTRICALLY INTERLOCKED TO OPEN WHEN EITHER WARM AIR FURNACE BURNER IS IGNITED AND CLOSE WHEN FURNACE SHUTS DOWN.
6. FIRE DAMPERS - FURNISH AND INSTALL FIRE DAMPERS WHERE CALLED FOR ON THE DRAWINGS. FIRE DAMPERS SHALL BE OF 100% OUT OF AIR STREAM HEAD AND LEAF. THEY SHALL BE ALL LABELED FOR ONE HOUR FIRE RATING AND SHALL MEET THE APPROVAL OF THE STATE FIRE MARSHALL (TITUS OR AIR BALANCE COMPANY). PROVIDE AND INSTALL ACCESS DOORS FOR EACH FIRE DAMPER IN DUCTS AND LABEL SAME AS FIRE DAMPER. ALSO FURNISH AND INSTALL CEILING ACCESS PANEL FOR EACH FIRE DAMPER IN NON-ACCESSIBLE CEILINGS.
7. THERMOSTATS - HONEYWELL T88E CHRONOTHERM CLOCK THERMOSTAT.

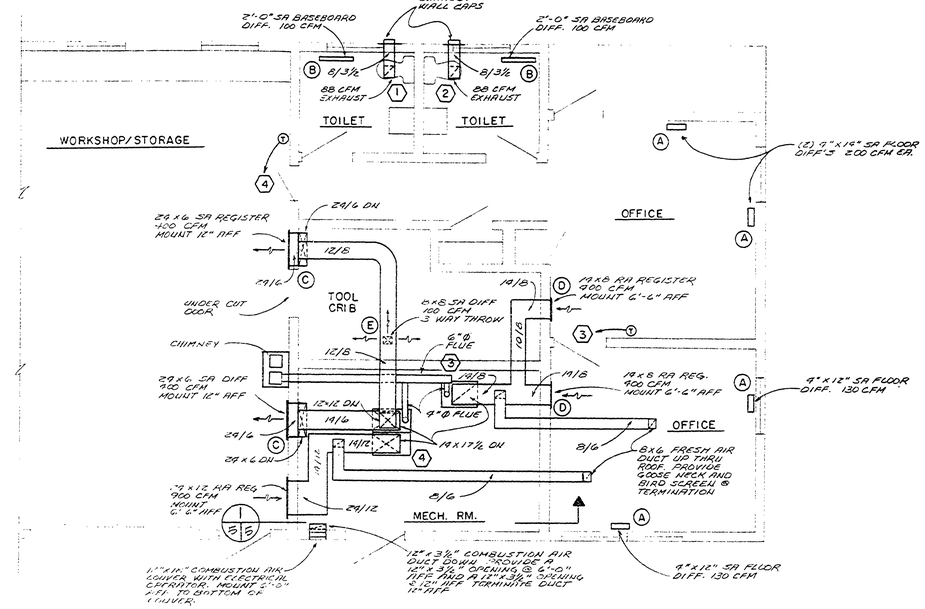

HEATING FLOOR PLAN

SCALE 1/4"=1'-0"

MECHANICAL SYMBOLS & ABBREVIATIONS

- SUPPLY ELBOW TURNED UP
- RETURN ELBOW TURNED UP
- SUPPLY ELBOW TURNED DOWN
- RETURN ELBOW TURNED DOWN
- SUPPLY AIR DIFFUSER
- RETURN AIR REGISTER OR GRILLE
- FIRE DAMPER IN VERITICAL DUCT
- FIRE DAMPER IN HORIZONTAL DUCT
- 12/8 — DUCT (SIZE IN INCHES, FIRST FIGURE SIDE SHOWN)

AFF	ABOVE FINISHED FLOOR
CONC.	CONCRETE
CFM	CUBIC FEET PER MINUTE
DIFF	DIFFUSER
DN	DOWN
MECH. RM.	MECHANICAL ROOM
RA	RETURN AIR
REG	REGISTER
SA	SUPPLY AIR
SM	SHEET METAL
(T)	THERMOSTAT

MECHANICAL EQUIPMENT SCHEDULE

(1)(2) TOILET ROOM EXHAUST FAN BASED ON LOREN COOK GEMINI MODEL # 9-10, 88 CFM @ 0.10" STATIC PRESSURE, 1050 RPM, 2.7 SONES, 25 WATT, 120V 1Φ MOTOR. PROVIDE WITH WALL CAP AND BACK DRAFT DAMPER.

(3) DOWN-FLO, NATURAL GAS FIRED FURNACE BASED ON LENNOX MODEL G12ND2E-55 WITH AN INPUT RATING OF 55,000 BTUH AND AN OUTPUT RATING OF 44,000 BTUH, 860 CFM @ 0.25" EXTERNAL STATIC PRESSURE. BLOWER MOTOR SHALL BE DIRECT DRIVE 1/3 H.P., 120V-1Φ.

(4) UP-FLO, NATURAL GAS FIRED FURNACE BASED ON LENNOX MODEL G12D2-55 WITH AN INPUT RATING OF 55,000 BTUH AND AN OUTPUT RATING OF 44,000 BTUH, 700 CFM @ 0.20" EXTERNAL STATIC PRESSURE. BLOWER MOTOR SHALL BE DIRECT DRIVE 1/3 H.P., 120V-1Φ.

REGISTER, GRILLE, LOUVER, & DIFFUSER SCHEDULE			
NO	DESCRIPTION	MANUF.	MODEL NO.
(A)	SUPPLY AIR FLOOR DIFFUSER	HART & COOLEY	911
(B)	SUPPLY AIR BASEBOARD DIFFUSER	HART & COOLEY	462
(C)	SUPPLY AIR SIDEWALL REGISTER	HART & COOLEY	621
(D)	RETURN AIR GRILLE	HART & COOLEY	94
(E)	SUPPLY AIR CEILING DIFFUSER	HART & COOLEY	2303
*(F)	COMBUSTION AIR LOUVER	TITUS	OXL-F1

* PROVIDE WITH ELECTRICAL OPERATOR.

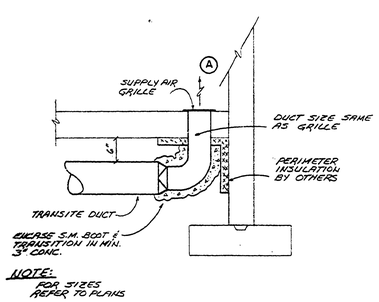

NOTE: FOR SIZES REFER TO PLANS

UNDER SLAB S.A. DUCT DETAIL

NOT TO SCALE

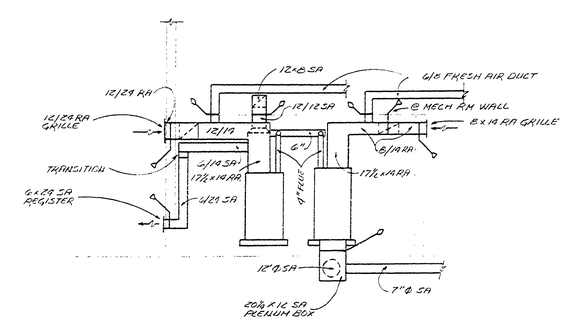

SECTION 1/S

NOT TO SCALE

SURVEYED BY		DRAWN BY V. MILLS	10/81	NO.	DATE	BY	REVISIONS	NO.	DATE	BY	REVISIONS	MICHIGAN DEPARTMENT OF NATURAL RESOURCES	HEATING & VENTILATION PLAN	AREA OR PARK PONTIAC STATE PARK	PROJECT NO. 24.1290
DESIGNED BY J. BARKER	10/81	CHECKED BY M. Le CLAIRE	10/81	1.				3.					SHEET TITLE	PROJECT OFFICE/WORKSHOP/GARAGE	SHEET 5 OF 6 PLAN NO. A-103
	DATE		DATE	2.				4.							